2021-01-0288 Published 06 Apr 2021

Protecting Passenger Vehicles from Side Underride with Heavy Trucks

Garrett Mattos and Keith Friedman Friedman Research Corporation

Aaron Kiefer Collision Safety Consultants

Perry Ponder Seven Hills Engineering, LLC.

Citation: Mattos, G., Friedman, K., Kiefer, A., and Ponder, P., "Protecting Passenger Vehicles from Side Underride with Heavy Trucks," SAE Technical Paper 2021-01-0288, 2021, doi:10.4271/2021-01-0288.

Abstract

Impacts between passenger vehicles and heavy vehicles are uniquely severe due to the aggressivity of the heavy vehicles; this is a function of the difference in their geometry and mass. Side crashes with heavy vehicles are a particularly severe crash type due to the mismatch in bumper/structure height that often results in underride and extensive intrusion of the passenger compartment. Underride occurs when a portion of one vehicle, usually the smaller vehicle, moves under another, rendering many of the passenger vehicle safety systems ineffective. Heavy vehicles in the US, including single-unit trucks, truck tractors, semi-trailers, and full trailers, are currently not required to have side underride protection devices. The NTSB, among other groups, has recommended that side underride performance standards be developed and that heavy vehicles be equipped with side underride protection systems that meet those standards. The work presented used virtual testing to evaluate the relative performance of example side underride devices compared with a baseline. We also evaluate the effects of different test conditions on underride guard performance. Crash test results were utilized for calibration purposes. A tractor-trailer, with and without side impact underride protection, was impacted by a passenger car and SUV under a range of impact conditions. Passenger vehicle intrusion metrics were calculated to provide an indication of relative risk for each impact condition. The results can support the development of side underride protection recommended practices.

Introduction

According to the NHTSA's FARS data, between 1975 and 2018 (Figure 22, Appendix A) there were 212,958 fatalities on US roads that involved a large truck with 70% of those fatalities being passenger vehicle occupants [1]. Considering all the fatalities in crashes between passenger-vehicles and trucks, 96% of those killed were in the passenger vehicle. Between 74,000 and 151,000 persons are injured annually in crashes with large trucks [2]. When involved in a crash with a heavy truck, occupants of passenger vehicles are 6 to 10 times more likely to be moderately, severely, or fatally injured than the heavy truck occupants [3].

The need for crash compatibility between trucks and passenger cars in the United States has been known since at least 1953 with the introduction of federal regulation 393.86 [4]. Its inadequacy was reported at least by 1969 and 1971[5,6]. In 1972 the Transportation Research Board had reported that designs for the prevention of fatal underride crashes between passenger vehicles and trucks were needed [7]. Extensive research has been reported demonstrating the need for substantial improvement of truck rear underride protection in the United States [8, 9, 10, 11, 12, 13, 14, 15, 16, 17, 18, 19, 20, 21, 22, 23, 24, 25] with demonstrated solutions on the road currently demonstrating the achievability and practicality for the trucking industry [26, 27, 28].

The introduction of requirements for front underride protection on trucks during involvement with passenger vehicles began at least by the early 1990s. Numerous papers have been published on front underride protection over the past thirty years. Front underride protection has been required in Europe since the 1990s starting with UNECE 93 [29], with enhancements involving energy absorbing front end underride protection (insert info from front underride paper) through the present with current requirements also including automatic braking of heavy trucks as part of collision avoidance being required during the past decade [16, 30, 31, 32, 33, 34, 35, 36, 37, 38, 39, 40, 41, 42, 43, 44, 45, 46, 47, 48, 49, 50, 51, 52, 53, 54, 55, 56, 57].

The present research reports on protection of passenger vehicles associated with side underride impacts with heavy trucks and trailers using finite element analysis (FEA) virtual testing methods. FEA methods for crash analysis have been used in the vehicle industry since as early as the 1960s [58, 59]. Examples of impact modeling of the vehicle fleet to assess future effects has been conducted since the 1970s and continues today with finite element modeling [37, 60, 61, 62, 63].

Example conditions are provided related to impacts involving 53' trailers. Background review is provided followed by a methodology used for virtual testing of example side underride guard systems. Results and discussion follow. The results can support the development of side underride protection recommended practices.

Background

Side underride guard protection for vehicles was illustrated in an 1896 patent recorded for side underride protection associated with street cars (Figure 23, Appendix A) [64].

By 1915 a patent for a side underride guard for motorbuses and like heavy vehicles had been awarded to protect against anyone from being driven over by the rear wheels (Figure 24, Appendix A) [65].

In 1977, a patent for a guard rail device for use on a large diameter wheel vehicle was issued as illustrated in Figure 25, Appendix A [66].

In 2006, a patent was filed for a vehicle side underride guard for use on trucks and trailers as shown in Figure 26, Appendix A [67]. The side underride guard attaches to the trailer and is positioned below the side edge of the trailer to obstruct the progress of a passenger vehicle under the side edge of the trailer.

Figure 27, Appendix A, shows a side skirt and side underride cable system included in a 2010 patent application. The side underride cable system was configured to be coupled to a trailer via a front mounting bracket and a rear mounting bracket [68, 69].

Patents in 2016 and 2018 (US 9,908,493 B1, US 9,463,759; Figure 28, Appendix A) described an underride guard that integrated with the rear guard and pre-tensioned fabric guard. This work effectively led to other similar designs and triggered additional research in the area.

Additional patent applications were made in 2018 for a side underride guard (US 20190077470A1) as shown in Figure 29, Appendix A. The patent application included a support system including a brace system and cable. The brace system included cross-braces that extended the width of the trailer. The cable extends across the intervals between the cross-braces [70].

In 2018 a patent was also filed for a side underride guard (Figure 30, Appendix A), "…configured to be coupled to a trailer, may comprise a first skirt wall of the trailer, positioned below a first sidewall of the trailer and extending along a first length of the trailer between a skirt wall front end and a skirt wall rear end and a cable system including a first cable coupled to the trailer, positioned below the first side wall, and extending along a second length of the trailer between a cable system front end and a cable system rear end, the skirt wall rear end being positioned forward of the cable system rear end" [71].

The Motor Carrier Act of 1935 directed the establishment of Federal rules and regulations for interstate motor carrier operations that govern "security for the protection of the public" [72]. During the 1960's underride crashes involving well known people made headlines drawing attention to the underride issue associated with trucks and trailers. In 1978 Calspan [73] conducted an analysis of heavy truck underride crashes. The Motor Carrier Act of 1980 contained a section "…to create additional incentives to carriers to maintain and operate their trucks in a safe manner…" [74] In Europe, lateral protection devices were incorporated in the regulations by 1988 [75]. While the protection was to prevent entrapment of motorcyclists, bicyclists and pedestrians along the open sides of trucks and trailers, it has been reported that such underride guards also demonstrated effectiveness in helping prevent cars from underriding [76]. In 1993, Rechnizter [77] studied fatal and injury crashes of passenger cars with the sides of heavy vehicles with additional work reported in 2002 [78]. In 2003, Trigo [79] reported that underride crash testing had established sufficient relationships between different body and roof styles to support a general formula for impact speed analyses in support of effective trailer side underride protection devices.

In 2006, Bodapati evaluated the effectiveness of particular underride guard designs [80]. Using FEA methods, two new guards for both the rear and side underride conditions were modeled for a straight truck and the performance of the guard in preventing passenger compartment intrusion was analyzed using LS-DYNA. Significant passenger compartment intrusion reductions were demonstrated. The performance of the side underride guard was studied with the striking passenger car impacting at 49, 64, and 80 km/h (30, 40 and 50 mph) with impacts on the side engaging the middle of the underride guard. It was noted that conducting the study with moving trucks instead of stationary trucks would be more realistic.

In 2009, Aparicio [81] reported on a study of truck side design improvements. In 2010, Patten [82] reported on a background investigation associated with side guards for trucks and trailers in Canada. In 2011 Moradi [83] investigated the influence of side underride guard height on compartment intrusion utilizing FEA methods. It was reported that the probability of severe injuries to occupants of small cars was reduced by 250% compared to a no guard configuration. In 2012, a study of side under run protection was conducted for the Australian Trucking Association [84].

In 2013, Galipeau-Belair [85] reported on the development of a regulation for testing the effectiveness of rigid side underride protection devices adapting the Canada rear test equipment to the side. While in 2014 [86, 87] he reported an FEA study on the design and development of side underride protection devices (SUPD) for heavy vehicles in which designs for trailers and straight trucks, where the exterior surfaces representative of roadside guardrails or square tube designs were demonstrated. It was suggested that 525kN force levels be achieved based with these devices.

In 2018 side underride protective device designs for oblique impacts with passenger cars were analyzed with FEA impact simulations. Three oblique angle impacts of 30, 22.5 and 15 degrees from the rearward direction of the trailer were used with the striking vehicle impacting at 80 km/h (50 mph) as well as some studies of gap effects. A Toyota Camry was used as the striking vehicle with a stationary trailer. Optimization methods were used to minimize weight while redirecting the impacting vehicle without passenger compartment intrusion [88]. However, material failure was not included in the simulation models.

FIGURE 1 Fatal side underride crash

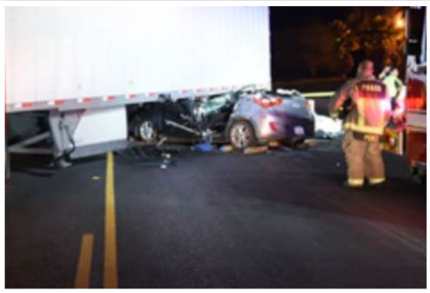

FIGURE 2 Narrow angle passenger car to trailer impact

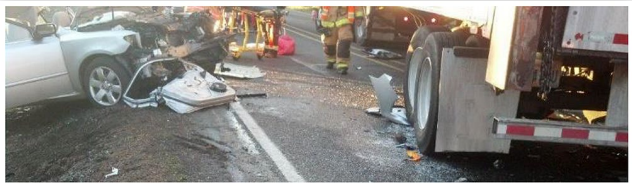

FIGURE 3 Narrow angle pickup to trailer impact

Figure 1 shows the side underride of a passenger car under a tractor trailer; the passenger vehicle was traveling about 78 km/h and impacted the trailer at about a 25-degree angle. The semi-tractor trailer was turning left across a 4-lane highway with a multi-direction turn lane dividing the lanes.

Figure 2 shows the results from a narrow angle impact where the truck was turning onto a two-lane road moving at about 8 km/h (5 mph) with the striking vehicle moving at about 70 km/h (45 mph). The impact angle is about 15-20 degrees.

Figure 3 shows the results of a narrow impact between the tractor trailer moving at about 72 km/h (45 mph) and a pickup moving at about 49 km/h (30 mph). The crash occurred on a curve the trailer rear being over the middle of the snow-covered road.

The result of a fatal underride crash in which a small SUV impacted a semi-trailer at an intersection with speeds of 80 km/h (50 mph) and 100 km/h (65 mph), respectively, is shown in Figure 4. The SUV under-rode the trailer toward the middle and then engaged with the rear passenger side tires.

FIGURE 4 Fatal underride crash at intersection

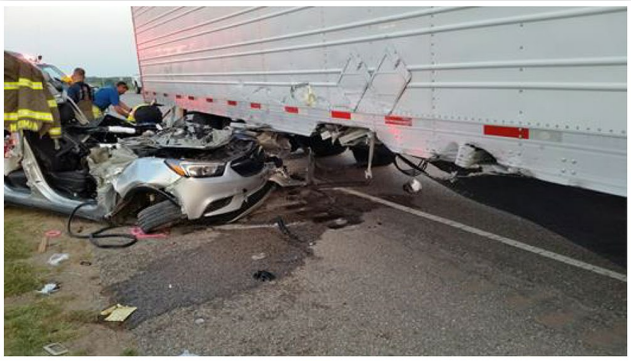

Examples of Retrofit Side Underride Guards

Side underride guards have been retrofitted on trailers in the United States and Canada. Examples include the AngelWing, SafetySkirt, and PHSS.

The AngelWing consists of two side assemblies, each with several rectangular steel vertical members (dependent on trailer length) welded at the lower edge to a rectangular tube. The length and number are dependent on the trailer length. For a 53' trailer there are seven vertical members on each side. Each of the vertical members are attached to the trailer floor supports with a fastener. The left and right assemblies are connected with an X-brace made from rectangular steel tubes and connected at the top and bottom of the vertical members. A skirt is attached to the vertical members to provide drag reduction and improved fuel economy. An example AngelWing is shown in Figure 5.

The SafetySkirt and ToughGuard underride guard system consists of an aluminum structure (ToughGuard) at the end of the trailer connected to the trailer and rear underride

FIGURE 5 AngelWing side underride guard (shown without air deflector above)

FIGURE 6 SafetySkirt/ToughGuard underride guard

FIGURE 7 PHSS side underride guard - Canada

guard. A flexible material couples to the ToughGuard at the rear and a mounting structure toward the front of the trailer or to an AngelWing underride guard. This system is shown in Figure 6.

PHSS of Canada has a Lateral Protection side underride guard installed on trailers in the field. The system has a high-resistance vinyl skirt, multiple high strength belts that create a safety net, is highly resistant to weather conditions, and has a galvanized steel structure. It reportedly is easily retractable from front to rear or from rear to front to simply trailer maintenance. An example is shown in Figure 7 below.

Methodology

Virtual testing was conducted to investigate the performance of an exemplar side underride guard based on an existing design in select impact scenarios. The performance of a tractor-trailer combination with and without a side underride guard in a trailer-side impact was calibrated against existing test data (Figure 8). The calibrated model of the trailer and side underride guard was then used to simulate an exploratory subset of the full range of impact conditions summarized in the test matrix in Table 1. The test matrix is meant to include the range of anticipated impact conditions based on real-world data. Fifty-six (56) km/h was selected as one of the impact velocities since it matched the velocity used for calibration tests and is also representative of the design speed of many systems. Eighty (80) km/h was also used since it is similar to the test speed for longitudinal roadside barriers and is representative of the low-end speed on roadways where passenger

TABLE 1 Full set of underride guard impact conditions

Impact Mode	Impact Angle (deg)	Velocity		Vehicle Type
		Vehicle	Truck	
Centered on trailer	90, 60, 30, 10	56, 80	0, 56, 80	Sedan, SUV
Forward 1/3 on trailer				
Rear 1/3 on trailer				
Centered on trailer - sliding	60, 30, 0	28, 56	0, 56, 80	Sedan, SUV

FIGURE 8 Replication of IIHS test configuration (air deflector not shown)

FIGURE 9 Top view of center impact configurations (*indicates impact duplicated with SUV)

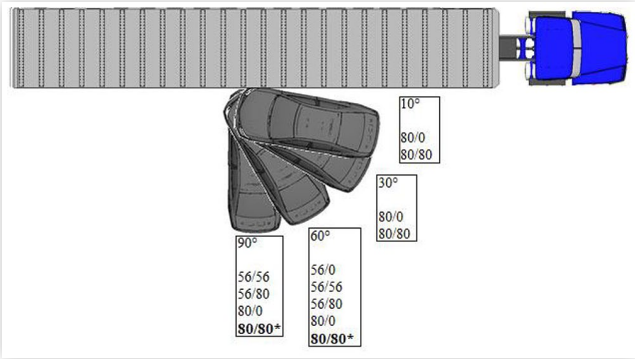

vehicles and heavy trucks would interact. We also included 'Sliding' conditions that were meant to replicate the impacting vehicle sliding on an icy road surface. The direction of impact was selected to provide the maximum difference in velocity between the truck and passenger vehicle which was intended to provide for a worse-case scenario.

Twenty-six underride guard impacts using a passenger vehicle and three with a Sport Utility Vehicle (SUV) were simulated. An impact between a passenger vehicle and trailer with no underride guard was used as a baseline test. Overviews of the impact orientations are provided in Figure 9, Figure 10, and Figure 11. Finite element simulations were conducted using LS-DYNA version 10.1 [89]. The finite element models typically contained 2.5 million elements.

Modified Finite Element (FE) models of a 16 m (53 ft) trailer (dry van) and tractor, originally developed under an NTRCI project [90] were used as the target vehicle. For all

FIGURE 10 Side view of rear impact configurations (*indicates impact duplicated with SUV)

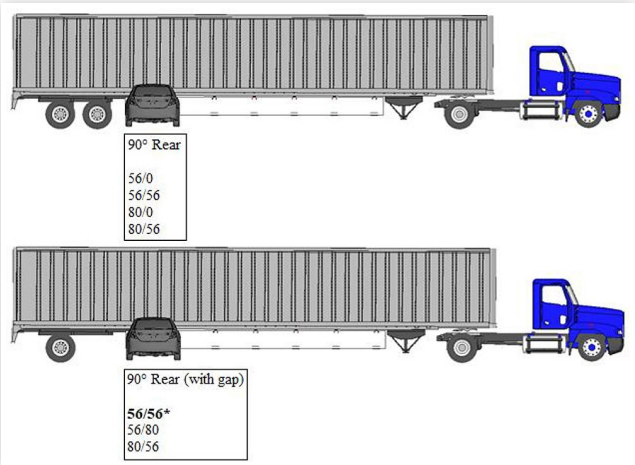

FIGURE 11 Top view of sliding impact configurations; vehicle trajectory perpendicular to trailer

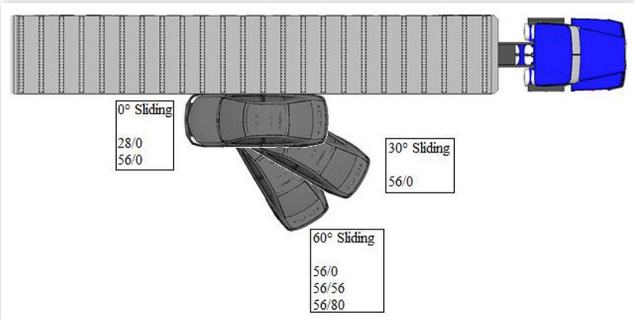

simulations, the semi-trailer was ballasted to a total test weight of 16,584 kg. The bullet vehicles were a 2012 Toyota Camry [91] and a 2003 Ford Explorer.

A FE model representing the AngelWing (US 20080116702 A1) underride guard was created for this study from existing CAD files and engineering drawings. Material properties were defined, including failure thresholds, using a combination of publicly available data and internal test results.

The performance of the FE trailer and underride guard were calibrated against existing IIHS test data. The IIHS tests utilized a Chevrolet Malibu to impact the center of a 16 m (53 ft) dry van at 56 km/h with and without the AngelWing underride guard (IIHS Test CF17003 and CF17002). The test conditions were replicated in an FE environment. The vertical positions of the vehicles were defined such that the underride guard had a ground clearance of 478 mm and the front bumper of the passenger vehicle overlapped the underride guard by 49 mm to be consistent with the IIHS test conditions. Physical test data was limited to observations of vehicle damage and high-speed video measurements of intrusion relative to the trailer.

The calibrated FE models were then used to simulate the range of depicted in Figure 9, Figure 10, and Figure 11. These included impacts centered on the underride guard ('Center') as well as those with the driver side tires aligned with the rear of the underride guard ('Rear'). A 'Gap' test was also conducted in which the front set of tires in the rear tandem were removed (Figure 10-bottom) to generate a 1686 mm gap between the aft end of the underride guard and the forward most part of the rear tires. The standard gap for all other runs was 441 mm. Scenarios meant to represent icy conditions were also simulated and notated as "Sliding". In these scenarios the friction coefficient between the vehicle tires and the ground was defined to be 0 with a velocity oriented directly perpendicular to the trailer.

For each simulation, the amount of passenger compartment intrusion (PCI) and the peak acceleration of the impacting vehicle were measured.

Results

The test conditions and comparative results between the physical and FE tests are shown in Table 2. The FE models demonstrated realistic and representative performance under the conditions explored. In the underride guard scenario, the FE model produced results nearly identical to the physical test. The damage to the vehicle and underride guard for the physical and FE tests can be seen in Figure 12. In the no-underride guard scenario the FE model translated about 37 cm

TABLE 2 Summary of calibration data

	No guard [Physical / FE]		Underride guard [Physical / FE]	
	Physical	FE	Physical	FE
Impact Angle	90 deg		90 deg	
Impact Speed	56.4 km/h		56.4 km/h	
Peak intrusion of vehicle under trailer (cm)	265	302	86	84
Time of peak intrusion (ms)	346	270	116	110

FIGURE 12 Comparison of vehicle at maximum intrusion in IIHS test conditions with underride guard

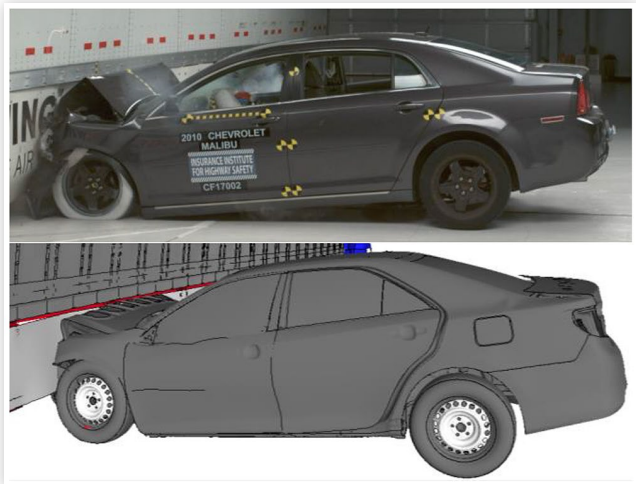

FIGURE 13 Comparison of sedan at maximum intrusion under trailer in IIHS test conditions with no underride guard

FIGURE 14 Summary results

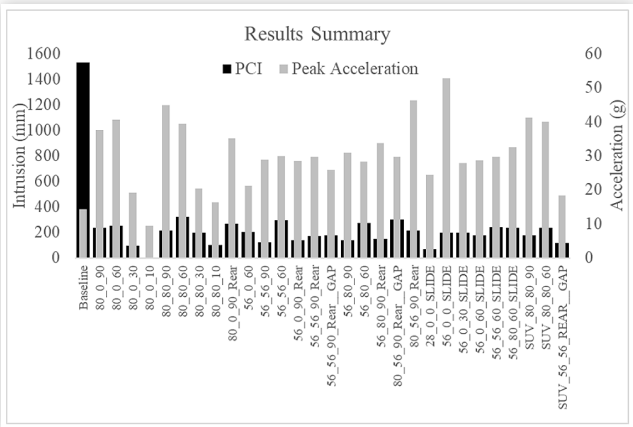

further under the trailer than the physical vehicle (Figure 13). This is most likely a result of the FE vehicle being a different model than in the physical test.

A summary of the passenger compartment intrusion and peak vehicle acceleration for the baseline and underride guard impacts is shown in Figure 14. The labels for each column can be read as: 'sedan velocity_truck velocity_impact angle_condition". For example, 56_0_90_Rear translates to a sedan traveling at 56 km/h and impacting the rear of a stationary truck at 90 degrees.

The baseline condition (no underride guard) resulted in 1534 mm of intrusion (Figure 13). In the underride guard impacts the magnitude of passenger compartment intrusion ranged from 0 mm to 323 mm with an average of 190 mm. The average peak resultant acceleration of the sedan in all 26 cases was 30.5 g, with the greatest value being 52.8. Generally,

FIGURE 15 Sedan structure; undamaged (top) and at maximum dynamic intrusion (bottom) [80_80_60]

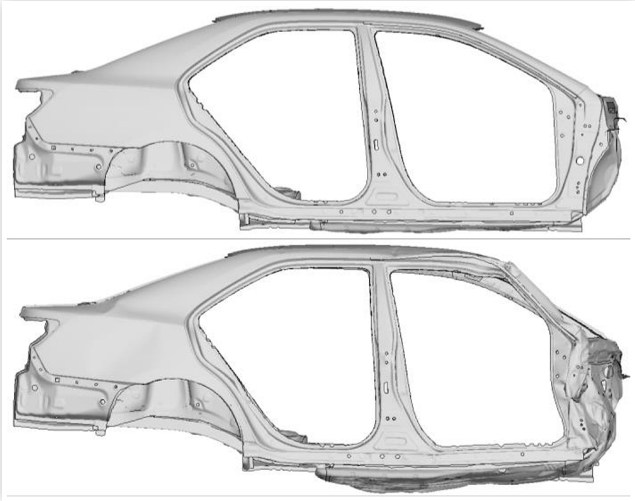

FIGURE 16 Time histories of vehicle CG acceleration in frontal impacts. N.B., crash severities are roughly equal

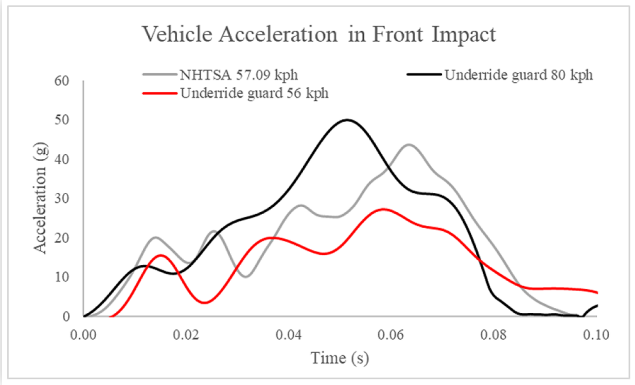

shallower impact angles resulted in lower amounts of intrusion and lower acceleration. Typically, the greatest amount of intrusion for the forward-directed impacts was limited to the leading side firewall (Figure 15). In the sliding side impacts, the maximum intrusion occurred at about the window line (Figure 18). For reference, this vehicle exhibited approximately 160 mm of intrusion near the A-post in the IIHS small overlap test (CEN1349).

The time histories of vehicle CG acceleration for the sedan in the 80 km/h and 56 km/h perpendicular impacts with the underride guard are shown in Figure 16 along with the acceleration for the same vehicle in a 57 km/h frontal barrier impact (NHTSA Test V10146). The overall shape of the frontal acceleration pulses was similar, with a greater magnitude exhibited in the higher velocity impact.

The acceleration pulses for IIHS (CES0622) and NHTSA (V10144) side impact crash tests are shown with the acceleration pulse for the same vehicle in a side impact with the underride guard in Figure 17. Note that the underride guard impact conditions are much more severe, in terms of delta-V and peak acceleration due to the mismatch in vehicle masses. In the impact with the underride guard, an icy road condition was

FIGURE 17 Time histories of vehicle CG acceleration in side impacts. N.B., underride condition is more severe than others

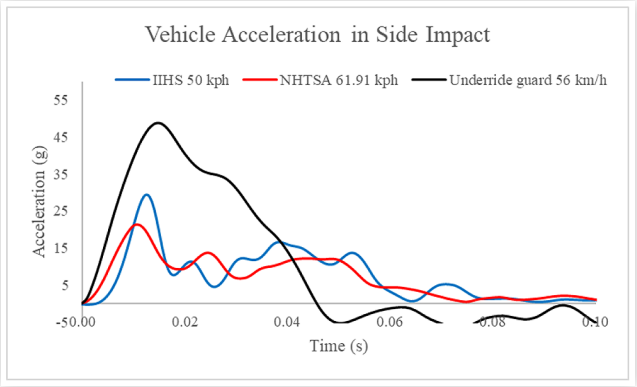

FIGURE 18 Side impact damage overlayed onto undamaged cross-section [56_0_0_SLIDE]

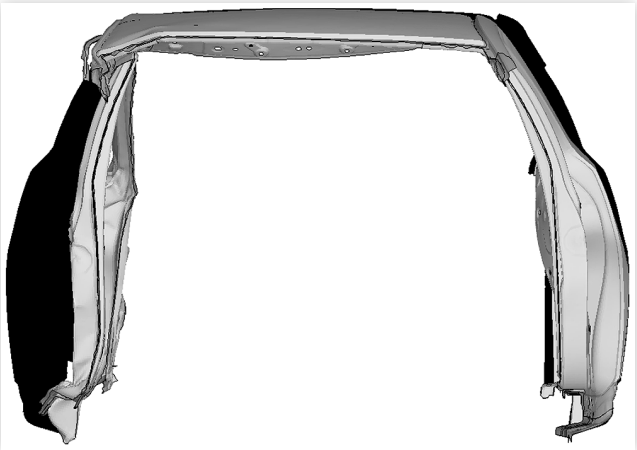

replicated with the coefficient of friction between the vehicle's tires and the ground surface defined as '0'. The peak acceleration was much greater in the side impact underride scenario than in the side impact crash tests. The maximum intrusion in the side impact underride scenario is shown in Figure 18.

The maximum intrusion into the passenger compartment for the IIHS, NHTSA, and underride impacts was 250 mm, 173 mm, and 199 mm, respectively. The increased acceleration in the underride scenario vs the crash tests was a result of the larger reaction force provided by the trailer. The collision severity is significantly greater in the underride condition that in either of the typical side impact crashes with roughly double the delta-V. Despite the increased crash severity of the underride test, the depth of penetration into the passenger compartment did not increase.

Greater intrusion was measured in underride scenarios with a moving truck than with a stationary truck (Figure 19 and Figure 20), with one exception. In the 90-degree impact with an 80 km/h sedan, increasing the truck speed resulted in greater lateral deflection of the sedan engine bay and front tires. This effectively reduced the amount of intrusion into the passenger compartment at the firewall.

FIGURE 19 Passenger compartment intrusion in 80 km/h impacts with and without truck motion

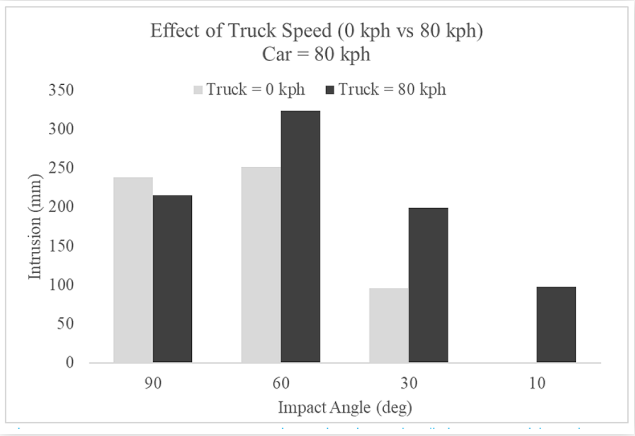

FIGURE 20 Passenger compartment intrusion in 56 km/h impacts with and without truck motion

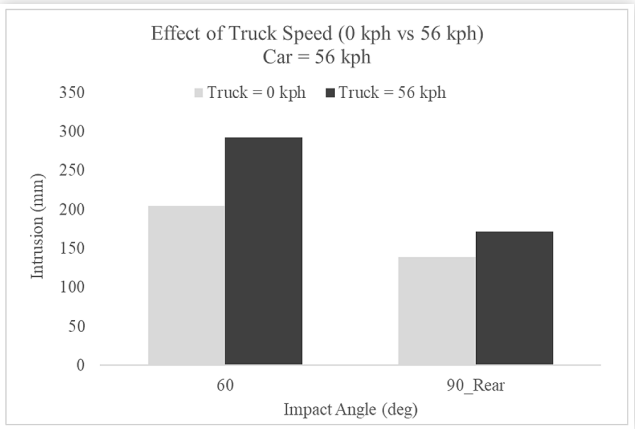

FIGURE 21 Passenger compartment intrusion in impacts with and without a gap between underride guard and rear wheels

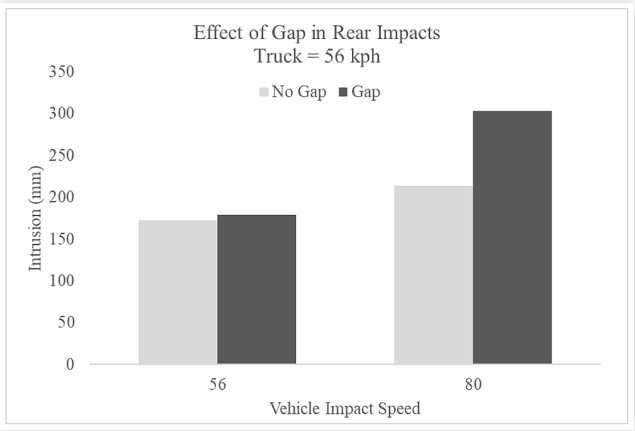

Discussion

The results of the analysis indicate that available side underride guards are effective at reducing passenger compartment intrusion (PCI) substantially in what are often fatal side underride crashes. This is supported by physical testing that has shown good performance up to 64 km/h. Nearly all passenger compartment intrusion above the beltline was mitigated other than in the purely lateral impact conditions. When intrusion did extend above the beltline, e.g., in the purely lateral sliding condition, the amount of PCI was similar to the intrusion generated in a 56 km/h side impact of a 5-star rated vehicle. Further, the average amount of PCI in the above tests was similar to the amount resulting from small overlap tests of the same vehicle. These results demonstrate that an underride guard can provide a sufficient reaction surface to allow for the vehicle's passive and active safety systems to protect the occupant. The underride guard also causes the location of PCI to move from near the occupant's head and torso to the lower extremities which reduces the likelihood of serious or fatal injury.

In general, the results suggest that impacts with a moving truck/trailer combination are more severe than when the truck is stationary. The added velocity of the truck/trailer combination results in greater intrusion of the bullet vehicle firewall as well as slightly higher peak accelerations. Impact severity was also increased when the size of the gap between the end of the underride guard and the rear tires was increased. The increased gap size allowed the bullet vehicle to interact more with the rear tires. In the impacts with a large gap, the trailer tires very nearly engaged the driver side door. These results can help to define a comprehensive test plan that can be used to assess the performance of an underride guard.

The acceleration pulses for all impacts were within the range of frontal and side impact crash test pulses generated in similar tests of vehicles that exhibit 5-star safety ratings. This indicates that these impacts were all survivable. The most severe impact scenario was a 56 km/h sideways slide into the trailer with an underride guard.

As shown, there is an 80% or greater reduction in PCI for impacts with an underride guard compared to the baseline condition. Additionally, the location of PCI in the underride guard impacts was generally found to be at the outer firewall area rather than at or above the beltline as in the baseline case. Reducing the PCI and moving the location of PCI away from the occupant's head and torso both significantly reduce the likelihood of serious injury. No adverse effects were observed as a result of the underride guard.

These results indicate that tests used to evaluate the performance of underride guards should account for a moving truck/trailer combination as this was found to increase the severity of the impact. Additionally, the location and size of gaps between an underride guard and the trailer tires and/or landing gear should also be considered as this was found to affect the results. The results demonstrate, along with other work in the literature, that Finite Element analysis can enhance physical tests to expand the number of impact scenarios in a cost-effective and time-efficient manner. While additional impact conditions and test cases can be analyzed, the results are expected to further demonstrate the importance of trailer side underride guards in reducing passenger compartment intrusion under these crash conditions.

Side underride guards integrated into the trailer structure may further enhance the safety benefits associated with preventing trailer underride and limit added weight. Exploration of these design alternatives should be explored in the future in conjunction with additional crash vehicles and configurations.

References

1. IIHS, Insurance Institute for Highway Safety, Large Trucks, http://www.iihs.org/iihs/topics/t/large-trucks/fatalityfacts/large-trucks, accessed Sep. 17, 2019, FARS, Heavy Truck Fatal Accident Statistics.
2. FMCSA, Large Truck and Bus Crash Facts 2018, FMCSA-RRA-19-018.
3. Xu, J., Wali, B., Li, X., and Yang, J., "Injury Severity and Contributing Driver Actions in Passenger Vehicle-Truck Collisions," *Int. J. Environ. Res. Public Health* 16:3542, 2019.
4. Rear End Protection, 49 Code of Federal Regulations, Paragraph 393.86, Effective Jan. 1, 1953.
5. NPRM Docket No. 1-11 Notice 2.
6. DeLeys, N. and Ryder, M. Jr., "A Study of Heavy-Vehicle Underride Guards," SAE Technical Paper 710121, 1971, https://doi.org/10.4271/710121.
7. Transportation Safety Board.
8. Zaremba, L. et al., "Eliminating Occupant Compartment Penetration in Moderate Speed Rear End Crashes: A Crash Test Program," April 1977.
9. Tomassoni, J. and Bell, G., "An Approach to Developing Underride Guard Requirements for Improved Occupant Protection," SAE Technical Paper 801422, 1980, https://doi.org/10.4271/801422.
10. Persicke, G. and Baker, P., "A Development of Truck Rear End Underride Protection," SAE Technical Paper 801423, 1980, https://doi.org/10.4271/801423.
11. Congress of the United States, Office of Technology Assessment, "Gearing Up for Safety: Motor Carrier Safety in a Competitive Environment," *NITS PB89-124796*, Sep. 1988.
12. Mahesh, B. et al., "Crashworthiness Enhancement in a Car-Truck Collision Using Energy Dissipative Under-Ride Guard," SAE Technical Paper 962211, 1996, https://doi.org/10.4271/962211.
13. Mariolani, J. et al., "Impact Project: Searching for Solution to the Underride Problem," SAE Technical Paper 982755, 1998, https://doi.org/10.4271/982755.
14. Federal Motor Vehicle Safety Standard 223, U.S. Code of Federal Regulations 49 CFR 571.223, Washington, D.C.
15. Federal Motor Vehicle Safety Standard 224, U.S. Code of Federal Regulations 49 CFR 571.224, Washington, D.C.
16. Billing, J. et al., "Design of a Generic Rear Impact Guard to Meet FMVSS 223," SAE Technical Paper 2000-01-3523, 2000, https://doi.org/10.4271/2000-01-3523.
17. Canada Gazette Part II, "Regulations Amending the Motor Vehicle Safety Regulations - (Rear Impact Guards)," *Canada Gazette* 138(20):1324-1442, 2004.
18. Economic Commission for Europe, "Addendum 57: Regulation No. 58," United Nations, Geneva, 2008.

19. Brumbelow, M. et al., "Evaluation of US Rear Underride Guard Regulation for Large Trucks Using Real World Crashes," *Stapp Car Crash Journal* 54:119-131, 2010.
20. Brumbelow, M., "Crash Test Performance of Large Truck Rear Underride Guards," in *Enhanced Safety Vehicle Safety Conference, Paper 11-0074*, 2011.
21. Berg et al., "Passive Safety of Trucks in Frontal and Rear-End Collisions with Cars," in *Enhanced Safety Vehicle Safety Conference, Paper 341*, 2003.
22. Mariolanian, J. et al., "Impact Project: Four Years Working to Overcome the Underride Tragedy," SAE Technical Paper 2000-01-3302, 2000, https://doi.org/10.4271/2000-01-3302.
23. Blower, D. and Campbell, K., "Underride in Fatal Rear-End Truck Crashes," SAE Technical Paper 2000-01-3521, 2000, https://doi.org/10.4271/2000-01-3521.
24. Rechnitzer, G. et al., "Performance Criteria, Design and Crash Tests of Effective Rear Underride Barriers for Heavy Vehicles," in *International ESV Conference, Paper 218*, 2001.
25. Blower, D. and Woodrooffe, J., "Heavy Vehicle Crash Data Collection and Analysis to Characterize Rear and Side Underride and Front Override in Fatal Truck Crashes," *DOT HS 811 725, NHTSA*, 2013.
26. IIHS, "Petition to NHTSA to Upgrade FMVSS 223 & 224," Feb. 2011.
27. Brumbelow, M., Letter to NHTSA, Feb. 16, 2016.
28. IIHS, "IIHS Recognized Semitrailers with Good Underride Guards," March 2017.
29. ECE, Regulation No 93 of the Economic Commission for Europe of the United Nations (UN/ECE) - Uniform Provisions Concerning the Approval of: I Front Underrun Protective Devices (FUPDs), II. Vehicles with Regard to the Installation of an FUPD of an Approved Type, III. Vehicles with Regard to their Front Underrun Protection (FUP), Date of Entry into Force Feb. 27, 1994.
30. Penoyre, S. and Riley, B., "Desirable Structural Features for the Design of Front and Rear Underrun Bumpers for Heavy Goods Vehicles," Transport and Road Research Laboratory, Report No. C168/84.
31. Dejeammes, M., "Heavy Truck Aggressivity for Road Users - In Search of Improved Safety," *Enhanced Safety Vehicle Safety Conference, Paper 856107*, 1985.
32. Congress of the United States, Office of Technology Assessment, "Gearing Up for Safety: Motor Carrier Safety in a Competitive Environment," *NITS PB89-124796*, Sep. 1988.
33. Schriever, T. and Alber, P., "Development of Energy-Absorbing Front Underrun Protection for Commercial Vehicles," VDI Reports No. 1046, Innovative Vehicle and Occupant Safety, March 1993.
34. Santos, P. and Onusic, H., "An Approach to Front Collisions Between Passenger Vehicles and Commercial Vehicles, with Emphasis on Front Bumpers," SAE Technical Paper 973078, 1997, https://doi.org/10.4271/973078.
35. Elvik, R., "Cost-Benefit Analysis of Safety Measures for Vulnerable and Inexperienced Road Users," Work Package 5 of EU-Project PROMISING, Institute of Transport Economics, Norwegian Centre for Transport Research, Oslo, June 1999.
36. Blower, D. et al., "Analysis of Truck-Light Vehicle Crash Data for Truck Aggressivity Reduction," SAE 2001-01-2726, 2001, https://doi.org/10.4271/2001-01-2726.
37. Berg et al., "Passive Safety of Trucks in Frontal and Rear-End Collisions with Cars," Enhanced Safety Vehicle Safety Conference, Paper 341, 2003.
38. Heavy Duty Vehicles eSafety Working Group, "Final Report of Heavy-Duty Vehicles Working Group, Activity Report for the Year 2004 V1.2, Brussels, October 2005.
39. Schram, R. et al., "Assessment Criteria for Assessing Energy Absorbing Front Underrun Protection on Trucks," ICRASH, July 2006.
40. Ait-Salem Duque, INSIA/UPM, TNO, "VC-Compat Final Workshop Presentation," Oct. 17-18, 2006.
41. Edwards, M. et al., "Improvement of Vehicle Crash Compatibility through the Development of Crash Test Procedures," Final Technical Report, Project Period 2003-2006.
42. Krusper, A. and Thomson, R., "Crash Compatibility Between Heavy Goods Vehicles and Passenger Cars: Structural Interaction Analysis and In-Depth Accident Analysis," in *10th International Symposium on Heavy Vehicle Transport Technology*, Paris, 2008.
43. National Center for Statistics and Analysis, NHTSA, "Traffic Safety Facts, 2008 Data", DOT HS 811 158, 2009.
44. Krusper, A. and Thomson, R., "Energy-Absorbing FUPDs and their Interactions with Fronts of Passenger Cars," *International Journal of Crashworthiness* 5(6):635-647, 2010.
45. Castellanos, M. et al., "Design Methodology of Heavy Truck Front Underride Protection Devices (FUPD)," in *ASME International Design and Engineering Technical Conference, DETC2010-28004*, 2010.
46. Welfers, T. et al., "Final Report, Concept Design of a Crash Management System for Heavy Goods Vehicles," June 2011.
47. MacDonald, T. et al., "A Comprehensive Review of Front Underride Protection Device Design and Evaluation," *Int. J. Vehicle Systems Modelling and Testing* 8(3):282-294, 2013.
48. MacDonald, T., "Rigid Front Underride Protection Device (FUPD): Compatibility and Development via Optimization," in *ASME International Design Engineering Technical Conference, DETC2013-12009*.
49. MacDonald, T. et al., "Front Underride Protection Device (FUPD) Development: Design Strategy with Simultaneous Loading," *International Journal of Crashworthiness* 19(2):196-207, 2014.
50. NTSB, Heavy Truck Aggressivity, Office of Highway Safety, NTSB, 2006.
51. Battelle, "Evaluation of the Volvo Intelligent Vehicle Initiative Field Operational Test, Final Report."
52. Virginia Tech Transportation Institute, "Safety Benefits Evaluation of a Forward Collision Warning System: Final Report," DOT HS 810 910.
53. Woll, J., "A Review of the Eaton Vorad Vehicle Collision Warning System," SAE Technical Paper 933063, 1993, https://doi.org/10.4271/933063.
54. Eaton, "EVT-300," Smart Cruise Control, 2003.
55. Friedman, K.., "Opportunities for Heavy Truck Front End Compatibility with Passenger Vehicles," in *ICR-14-46, Proceeding of International Crashworthiness Conference*, 2014.
56. Friedman, K. et al., "Heavy Truck Front-End Deployable System Opportunities for Crash Compatibility with

Passenger Vehicles," *International Journal of Crashworthiness* 23(2):161-172, 2017, http://dx.doi.org/10.1080/13588265.2017.1290735.

57. IIHS Status Report, "Front End, Energy Absorbing Truck Guards Reduce the Risks for Motorists," Aug. 25, 1989.
58. McHenry, R. and Naab, K., "Computer Simulation of the Crash Victim - A Validation Study," SAE Technical Paper 660792, 1966, https://doi.org/10.4271/660792.
59. Kamal, M., "Analysis and Simulation of Vehicle to Barrier Impact," SAE Technical Paper 700414, 1970, https://doi.org/10.4271/700414.
60. Minicars, Inc., RSV Phase I, 1973.
61. Ford, SSOM, 1976.
62. Friedman, K. and Bish, J., "Vehicle Design Crashworthiness Analysis, 99sf028," in *32nd ISATA: Advances in Automotive and Transportation Technology and Practice for the 21st Century*, June 14th-18th, 1999, Vienna, Austria.
63. Ridella, NHTSA, Fleet Safety Evaluation, 2013.
64. Patent 564027, "Safety Guard for Street Cars," US Patent Office, July 14, 1896.
65. Patent 1,127,241, "Safety Device for Motor Vehicles," Feb. 2, 1915.
66. Patent 4,060,268, "Guard Rail Device," Nov. 29, 1977.
67. Patent Application, US 2008/0116702 A1, filed Nov. 17, 2006.
68. Patent Application, US 20100264691A1, 2010.
69. International Patent Application WO 2010/120985 A1 Side Skirt and Side Underride Cable System for a Trailer.
70. Patent Application, 2019/0077470 A1 filed Sep. 13, 2018.
71. Patent 10,549,797 B2, Wabash National, L.P, Feb 4, 2020. Filed April 17, 2018.
72. Motor Carrier Act of 1935.
73. Calspan, Analysis of Heavy Truck Underride Accident Data, Sep. 1978.
74. Motor Carrier Act of 1980, Pub. L. 96-296.
75. ECE Regulation 73, in Force 1-1-1988.
76. Bloch, B. and Schmutzler, L., "Improved Crashworthy Designs for Truck Underride Guards," in *Enhanced Safety Vehicle Conference 98-S4-O-07.*
77. Rechnitzer, G., "Truck Involved Crash Study - Interim Report on Fatal and Injury Crashes of Cars and Other Road Users with the Front and Sides of Heavy Vehicles," Feb. 1993.
78. Lambert, J. and Rechnitzer, G., *Review of Truck Safety: Stage 1: Frontal, Side and Rear Underrun Protection* (Monash: Monash University - Accident Research Centre, 2002).
79. Trego, A., Enz, B., Head, D., and Oshida, Y., "A Scientific Approach to Tractor-Trailer Side Underride Analysis," SAE Technical Paper 2003-01-0178, 2003, https://doi.org/10.4271/2003-01-0178.
80. Bodapati, V.K.K., *Evaluation of Energy Absorbing Pliers Underride Guard for Rear and Side of Large Truck* (Wichita: Graduate School of Wichita State University, 2006).
81. Aparicio, H.P. and Feist, F., "Demonstration of Truck Side Design Improvements," in *Advanced Protection Systems (APROSYS)*, 2009.
82. Patten, J. and Tabra, C., *Side Guards for Trucks and Trailers Phase 1: Background Investigation* (Ottawa: National Research Council Canada, 2010).
83. Moradi, "Influence of a Truck Side Under-Ride Guard Height on Cabin Intrusion and Occupant Injury Potential of a Small Car in Car/Large-Truck Side Crashes—A Preliminary Study," in *Proceedings of the 7th Annual GRASP Symposium*, Wichita State Univ., 2011.
84. Australian Trucking Association, "Side Under Run Protection," Industry Technical Council Advisory Procedure, Forrest, 2012.
85. Galipeau-Belair, P., El-Gindy, M., Critchley, D., Ramachandra, S., and Ghantae, S., "Development of a Regulation for Testing the Effectiveness of a Rigid Side Underride Protection Device (SUPD)," *Int. J. of Crashworthiness* 19(1), 2013, doi:10.1080/13588265.2013.868083.
86. Galipeau-Bélair, P. "Design and Development of Side Underride Protection Devices (SUPD) for Heavy Vehicles," Master's Degree Thesis, University of Ontario Institute of Technology, Canada, 2014.
87. Galipeau-Belair, P. et al., "Optimized Rigid Side Underride Protection Device Designs for Tractor-Trailers and Straight Trucks," SAE Technical Paper 2014-01-0565, 2014, https://doi.org/10.4271/2014-01-0565.
88. Bligh, R. et al., "Computer Modeling and Evaluation of Side Underride Protective Device Designs," *DOT HS 812 522*, April 2018.
89. LSTC, "LS-DYNA A Program Nonlinear Dynamic Analysis of Structures in Three Dimensions," Livermore, CA 2018.
90. Plaxico, C., Miele, C., Kennedy, J., Simunovic, S., Zisi, N., "Finite Element Analysis Crash Model of Tractor-Trailers (Phase B)," NTRCI, 2009.
91. Development & Validation of a Finite Element Model for the 2012 Toyota Camry Passenger Sedan, Tech Summary," , May 2016, doi:10.13021/G8N889.

Contact Information

Dr. G. Mattos
1508-B Ferguson Lane
Austin, TX 78754
512 247 2277
gmattos@friedmanresearch.com.

Acknowledgments

This research was funded by Friedman Research Corporation. Information provided by AngelWing, and TrailerGuards is gratefully acknowledged.

Definitions/Abbreviations

Heavy truck definitions - The definitions used for medium and heavy trucks vary but can include Characterization by vehicle GVW as defined by: Class 3,4,5,6 (straight trucks) GVW 26,000, Class 7 & 8 (GVW >26,000) with trailer capability

FEA - Finite Element Analysis

Appendix A

FIGURE 22 Total deaths involving large trucks (FARS data)

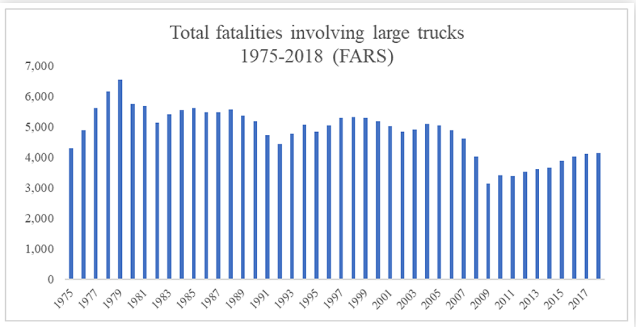

FIGURE 23 1896 side underride guard patent

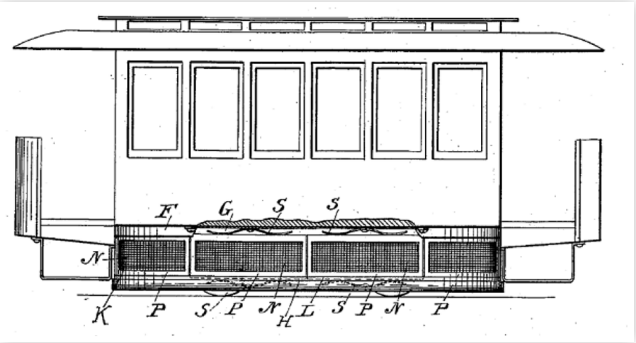

FIGURE 24 1915 safety device for motor vehicles

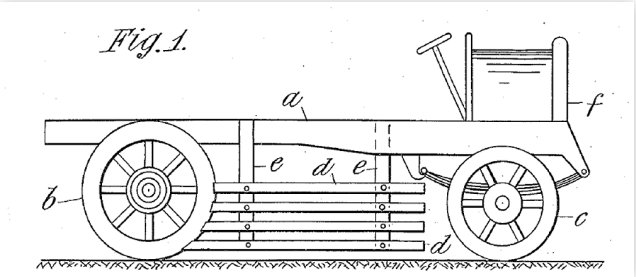

FIGURE 25 1977 patent for guard rail device for large-wheeled vehicles

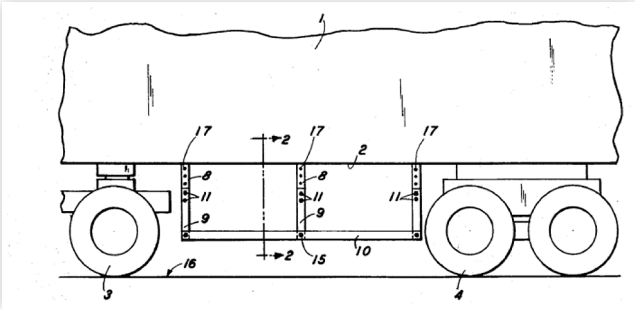

FIGURE 26 2006 side underride guard patent application drawing

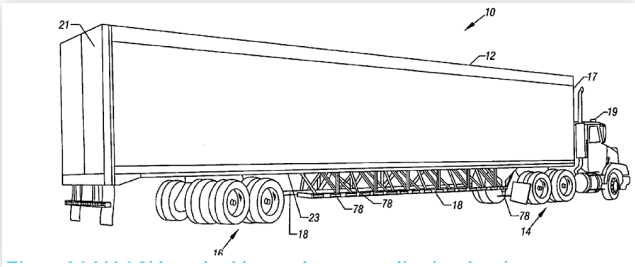

FIGURE 27 2010 side underride guard patent application

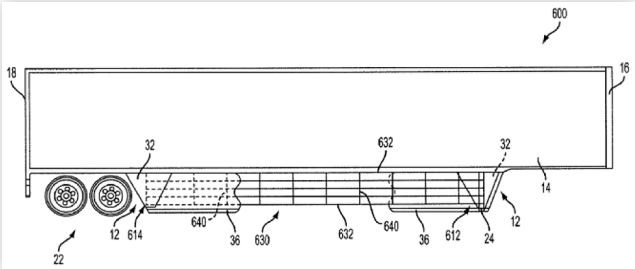

FIGURE 28 2016 patent integrating rear guard and taut fabric

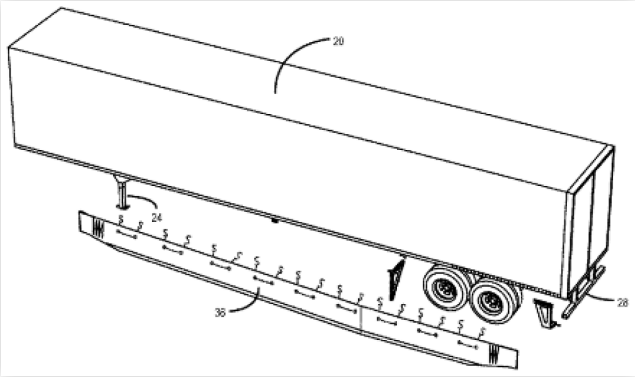

FIGURE 29 2018 side underride guard patent application

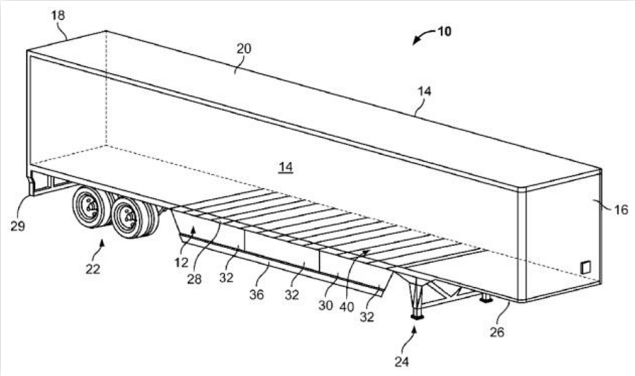

FIGURE 30 2018 side underride guard patent issued

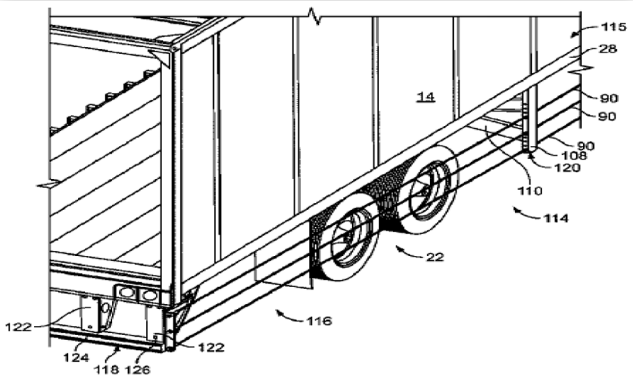

ISSN 0148-7191