NRC·CNRC

PROJECT STATUS REPORT

Assessment of Flexible Lateral Protection Device for Preventing Vehicular Side Underride

Project: A1-019844

Issue Date: November 02, 2022

Prepared for

PHSS Fortier

Prepared by

Chris Ladubec

Patrick Kehoe

Elton Toma

Gordon Poole

National Research Council Canada
Conseil national de recherches Canada

Canada

Change Control

Version	Date	Description	Author
0		Draft	C. Ladubec, P. Kehoe, E. Toma, G. Poole
1		Final	C. Ladubec, P. Kehoe, E. Toma, G. Poole

Table of Contents

List of Figures

1 Introduction

This document is a report on the status of a collaborative project currently underway to assess the performance of a flexible side underride protection device (SUPD). Project partners are the National Research Council Canada (NRC), PHSS Fortier Inc. (PHSS Fortier) and Manac Inc. (Manac).

LPDs for the protection of vulnerable road users (VRUs) and for aerodynamic drag reduction on semitrailers have been available in North America for many years. These devices, however, are not intended to mitigate underride crashes involving passenger vehicles. Underride crashes are collisions in which a passenger vehicle slides under the body of a larger commercial vehicle – such as a semitrailer – due to the difference in height between the two vehicles. Underride crashes are particularly dangerous because the trailer may intrude into the passenger compartment, leading to fatalities or severe injuries.

An ideal SUPD would provide protection to VRUs as well as side underride protection, but there are many other constraints and requirements that must be taken into consideration in order for industry to adopt them, for example, they must:

- Have appropriate energy absorption characteristics in both VRU and vehicular side impact situations;
- Have a VRU physical barrier protection capability (preventing VRUs from being run over by real wheels);
- Be lightweight so that reinforcement of the trailer frame is not required, and so that the allowable vehicle weight is not significantly increased, as this would mean that less payload can be transported;
- Have drag reduction or at least neutral aerodynamic effects;
- Be suitable for winter operating conditions;
- Allow access to underneath the trailer;
- Provide sufficient ground clearance for bumps, grade crossings etc.;
- Be economically viable; and
- Have implementation and test standards approved by regulators.

PHSS Fortier has developed a novel, flexible SUPD that has the potential to meet many of the abovementioned requirements. Manac Inc, the largest trailer manufacturer in Canada, has conducted some preliminary testing to understand the PHSS Fortier SUPD's ability to provide adequate energy absorption in the event of a vehicular collision.

NRC's role in evaluating the side guard has been to conduct a series of static and dynamic computer simulations to assess how the SUPD performs when impacted by a vehicle at various speeds and locations. To this end, NRC built numerical models with implicit (static, small deformation) and explicit (dynamic, high deformation) FEA tools. The models were validated against quasi-static tests undertaken at Manac's research facility in Saint-Georges, QC.

This document provides an update on the work performed to date by NRC and also presents a subset of the preliminary findings.

2 PHSS Fortier SUPD Description

The PHSS Fortier SUPD attaches to the underside of a trailer with galvanized steel front and rear supports. Three high strength, tensioned flexible polyester straps are attached to the front and rear supports on both the driver side and the passenger side of the trailer. The straps are covered with a thin vinyl skirt. The entire system weights approximately 245 kg. The installation procedure is relatively easy and requires no welding. The system was designed for 2- or 3-axle dry box trailers or reefers.

Figure 1: PHSS Fortier SUPD – Exterior.

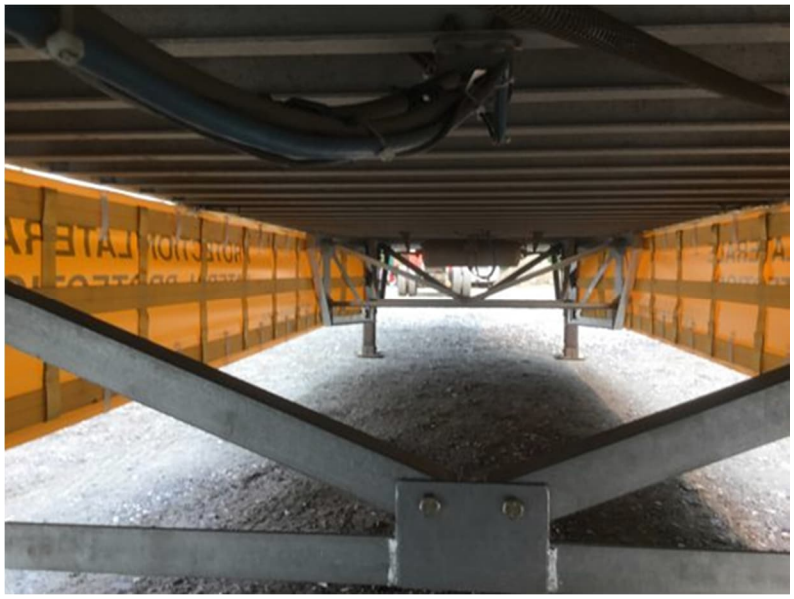

Figure 2: PHSS Fortier SUPD – Interior.

3 Full Scale Tests

To date, two rounds of full scale, quasi-static push tests have been completed to characterize the force-displacement response of the SUPD. In the full-scale tests, a Ford Ranger rear bumper was mounted onto a forklift equipped with a load cell to measure the applied load, displacement and corresponding absorbed energy. The strap and tarp parts of the system were unchanged, and consistent across all tests. The steel support structure was redesigned between tests.

Figure 3: Full Scale testing setup for bumper push test.

Figure 4: Deformation of SUPD under bumper loading.

4 Finite Element Modelling

Finite element (FE) models were used to along with the results of full scale testing to study the response of the SUPD under conditions that simulate collisions between passenger vehicles and semi-trailers. Static models of the support structure were created using the commercially available FEA software tool ANSYS Mechanical. These models are being used to perform stress analysis, the results of which are currently being used by PHSS Fortier to further develop the structure.

Dynamic Models were developed using the commercially available software package ANSYS LS-DYNA. The dynamic models were used to describe the behaviour of the flexible straps and to estimate the loading on the support structure. The dynamic models were calibrated using lab test data and full scale quasi-static testing of the complete SUPD system. In addition, the dynamic models were used to perform parametric studies of various crash scenarios.

4.1 Static FEA of Steel Supports

This section provides a very brief overview of the static FE modelling effort.

Static loading simulations of the steel supports were undertaken with ANSYS Mechanical. The steel support mesh is shown in Figure 5. Stress analyses were performed using loads determined from the dynamic FEA simulations. Figures 6 and 7 show a sample stress analysis of the front bracket. Figure 8 illustrates a sample stress analysis on the rear bracket.

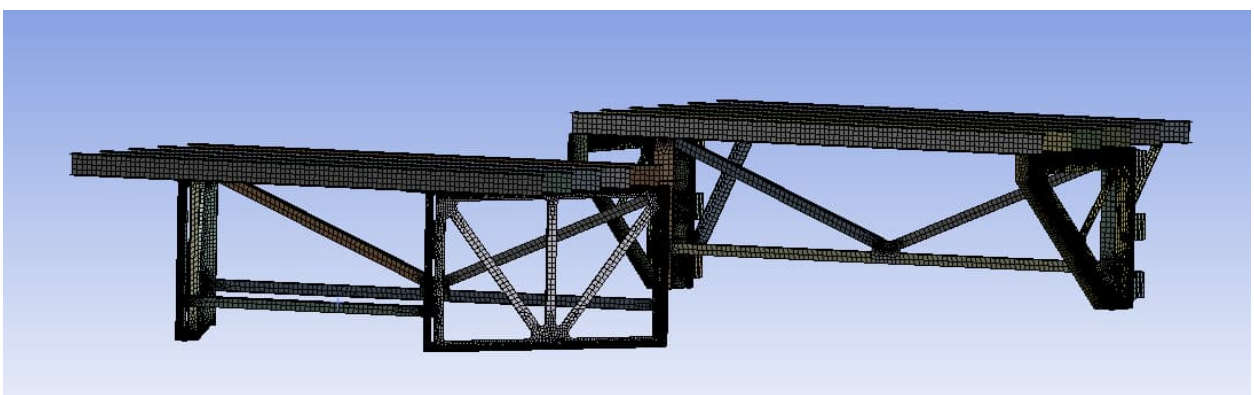

Figure 5: Typical mesh used for static FEA of steel supports.

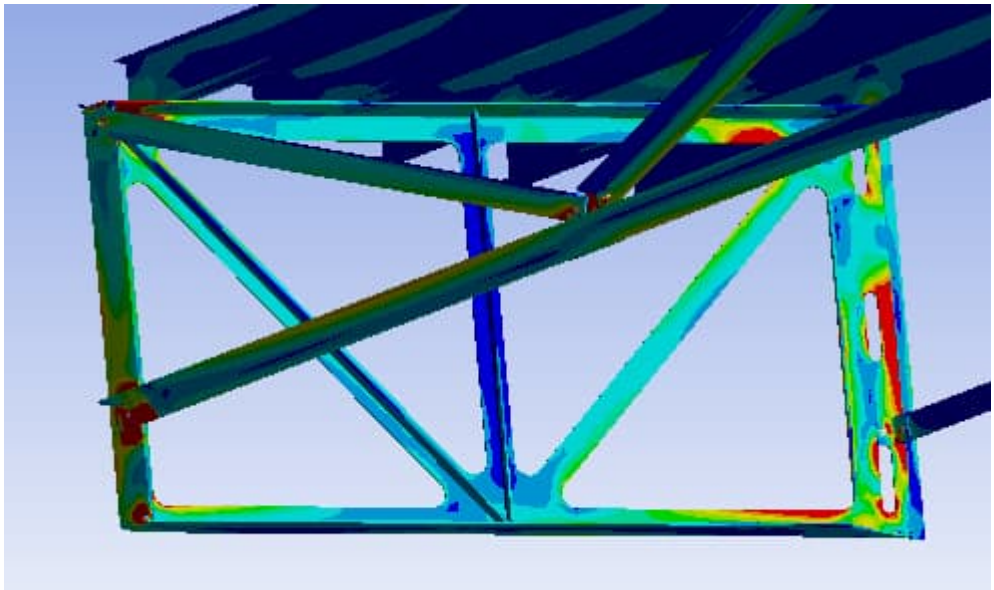

Figure 6: Stress Analysis of Front Support Bracket.

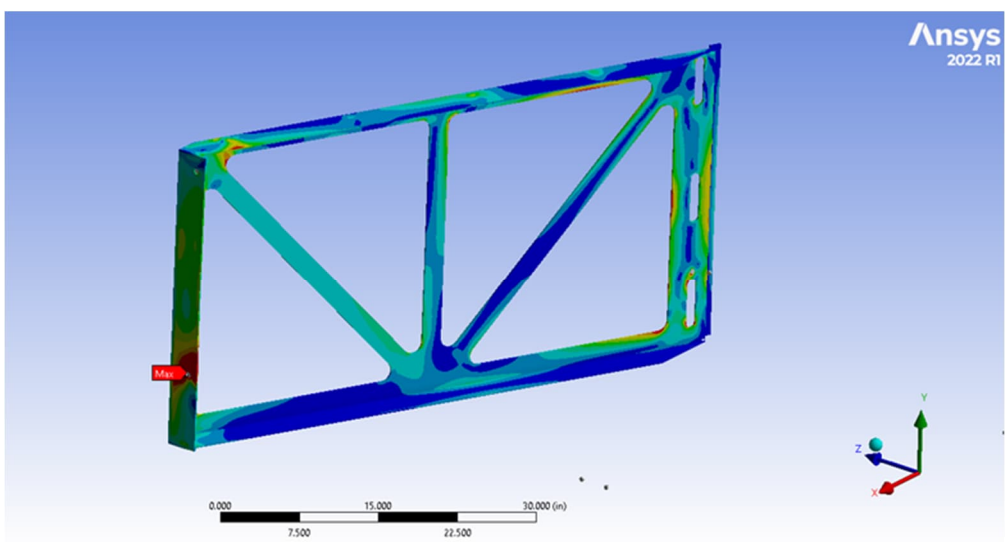

Figure 7: Stress Analysis of Front Support Bracket.

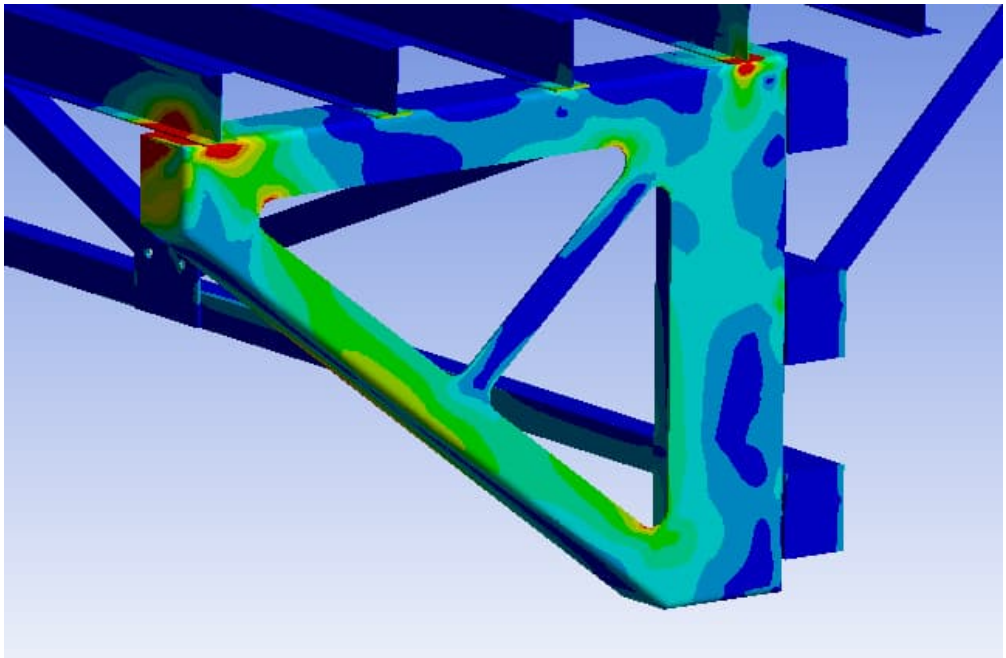

Figure 8: Stress Analysis of Rear Support Bracket.

Based on the FEA results, several design iterations were considered. Proposed design modifications were evaluated with respect to stresses experienced, and effects on overall system weight. Design modifications will be incorporated into a future round of full scale tests.

4.2 Dynamic FEA of Straps

ANSYS LS-DYNA was used to develop explicit dynamic models of the “flexible” portion of the model. The tarp adds very little stiffness to system, therefore it is not considered in FE models. While the steel supports are modelled in LS-DYNA, the degrees of freedom are fixed, thus the deformation of the steel supports is not considered. The deformation of the steel supports is studied in the quasi-static/implicit ANSYS Mechanical modes using loads obtained from the dynamic models.

4.2.1 Calibration of Strap model with Coupon Tests

A material model for the straps based on manufacturer test data was developed, as shown in Figure 9 and Figure 10.

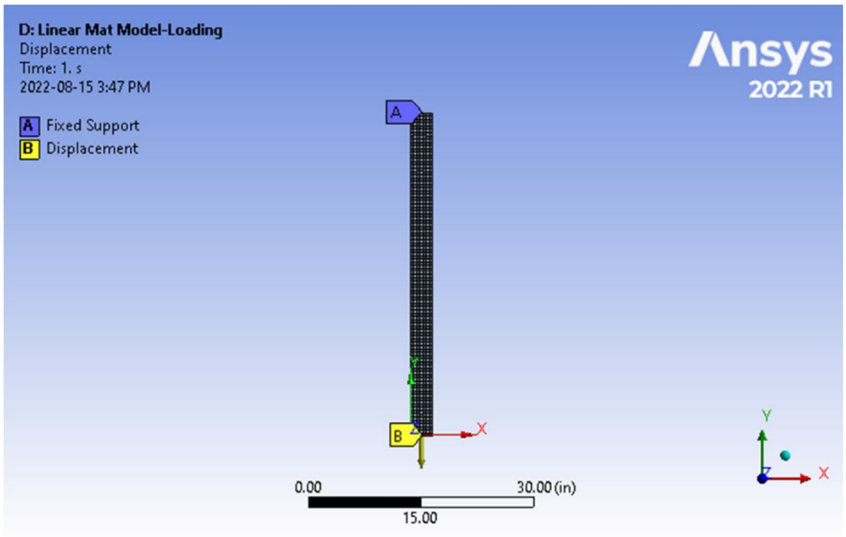

Figure 9: FE Model to simulate strap strength tests.

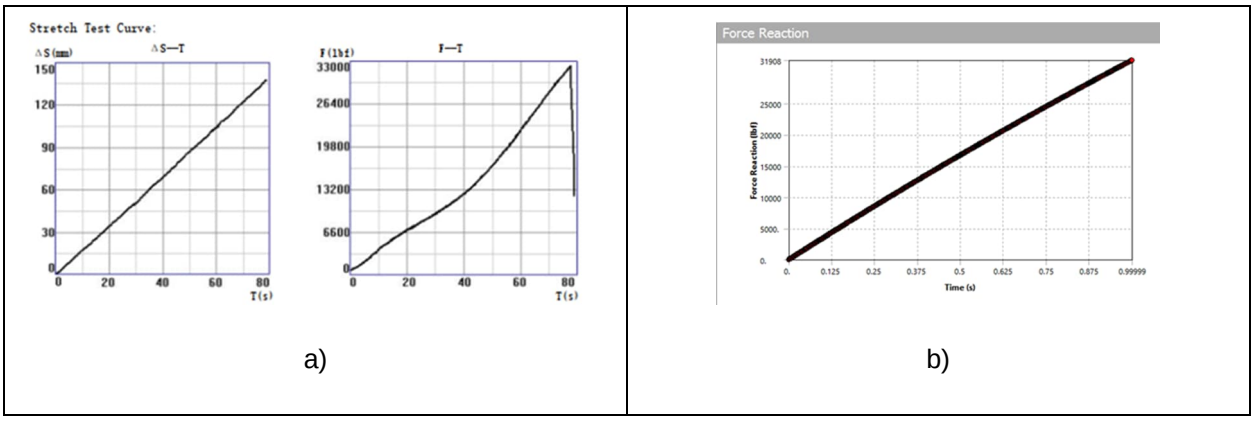

Figure 10: Force-deflection responses of a) test data and b) FEA.

4.2.2 Calibration of Strap model with Full Scale Tests

The dynamic models were initially calibrated using strap manufacturer coupon test data. The model was compared against full scale bumper tests, and a final calibration was performed to match TEST 2 results. This version of the model was used to estimate loads that were used by PHSS Fortier to improve the steel support design. The mesh used for the dynamic simulations is shown in Figure 10.

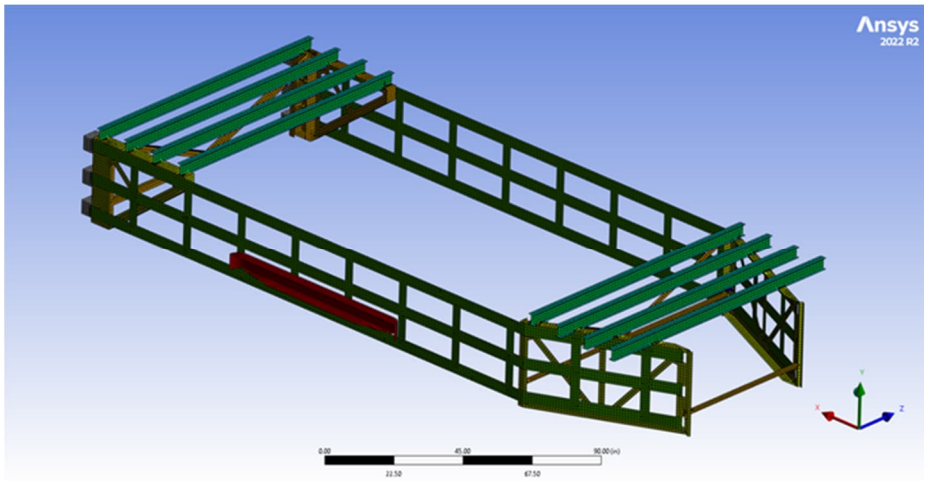

Figure 10: Mesh used for dynamic FEA of SUPD.

Figure 13 shows a comparison between the test data and several FE models. The FE model results are within the range of test results.

The strap models in LS-DYNA are used to determine estimates of expected bumper deflection and force, and final load cases for the steel supports.

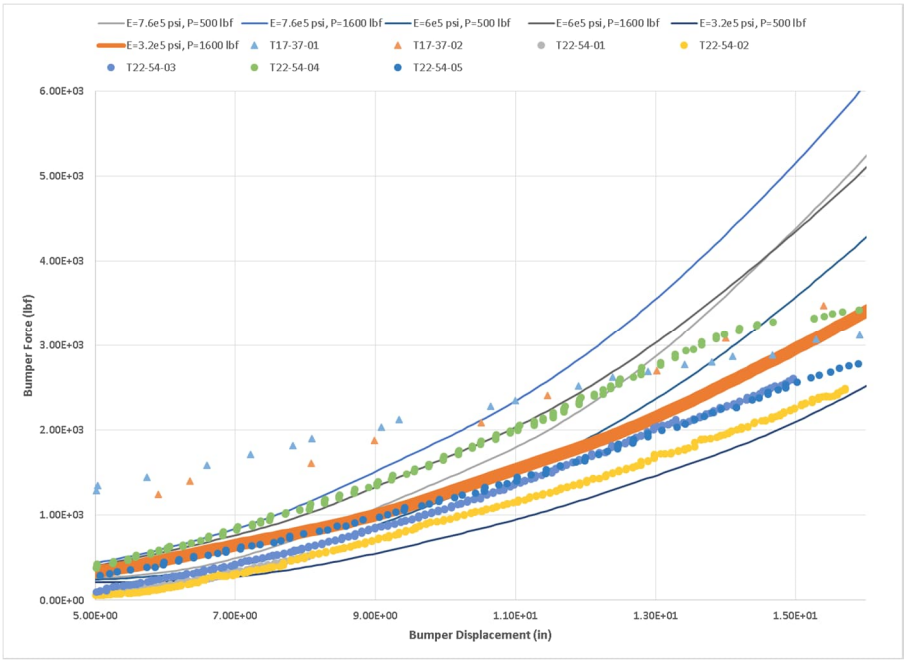

Figure 13: Force-displacement curves from FE model (lines) and test results (dots).

4.2.3 Dynamic Parametric Study

A parametric study is being conducted using the calibrated strap model to examine the response of the SUPD under a variety of collision scenarios. Three parameters are being considered: impact location, vehicle mass and vehicle relative velocity. The impact locations being considered are illustrated in Figure 14. The bumper impact heights were selected based on representative passenger car dimensions. At the moment, the parametric study considers collisions on the flexible strap section of the SUPD.

The vehicle masses were chosen to very broadly cover possible range of passenger vehicle masses (2205 lb (1000 kg), 3307 lb (1500 kg), and 4409 lb (2000 kg)). Vehicle velocities were selected to represent low relative speed collisions (6.2 mph (10 km/h), 9.3 mph (15 km/h), 12.4 mph (20 km/h)).

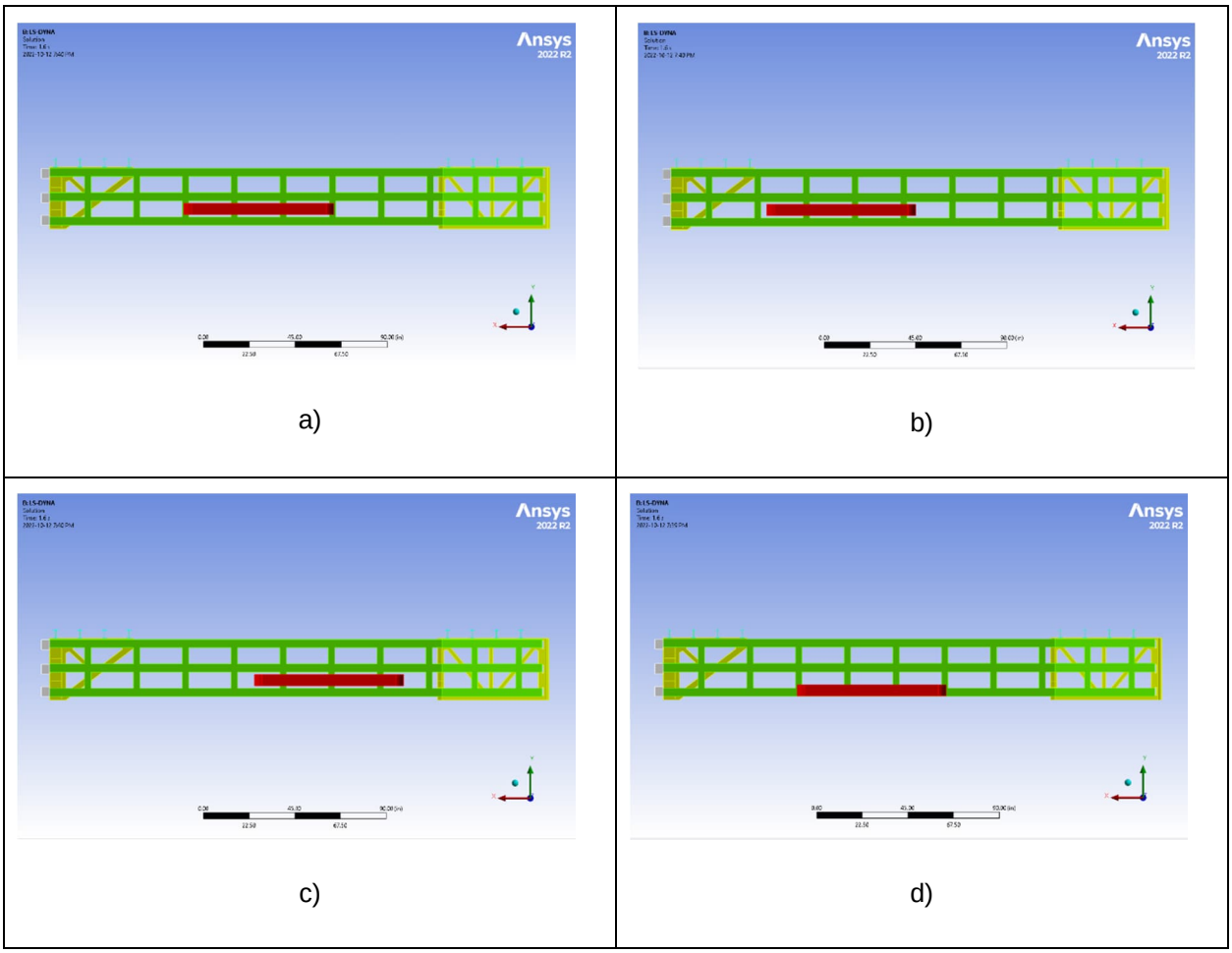

Figure 14: Bumper Locations for Parametric Study a) Centered position used in full scale tests b) Shifted towards rear, c) Shifted towards the front, d) Centered position with bumper aligned with bottom strap.

The results of the dynamic simulations are presented in Figure 15, Figure 16 and Figure 17. Figure 15 compares the force vs. velocity response of the straps for various mass / location combinations. As expected, increasing velocity and mass increases the peak bumper force.

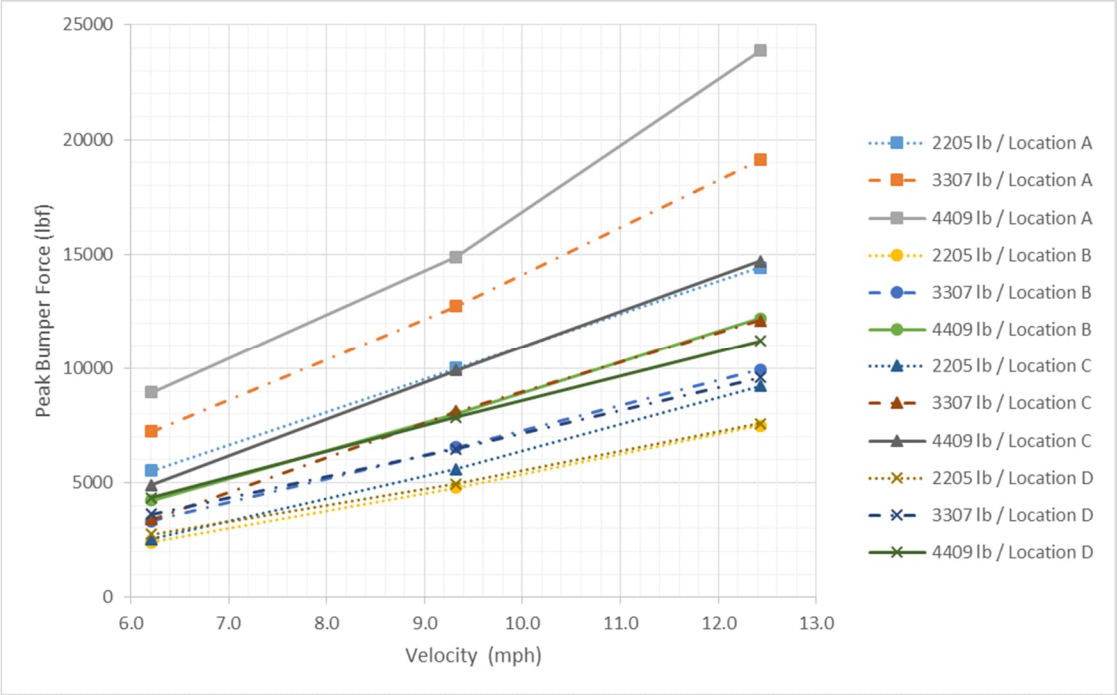

Figure 15: Peak Bumper Force vs. Velocity – Three Vehicle masses and 4 impact locations.

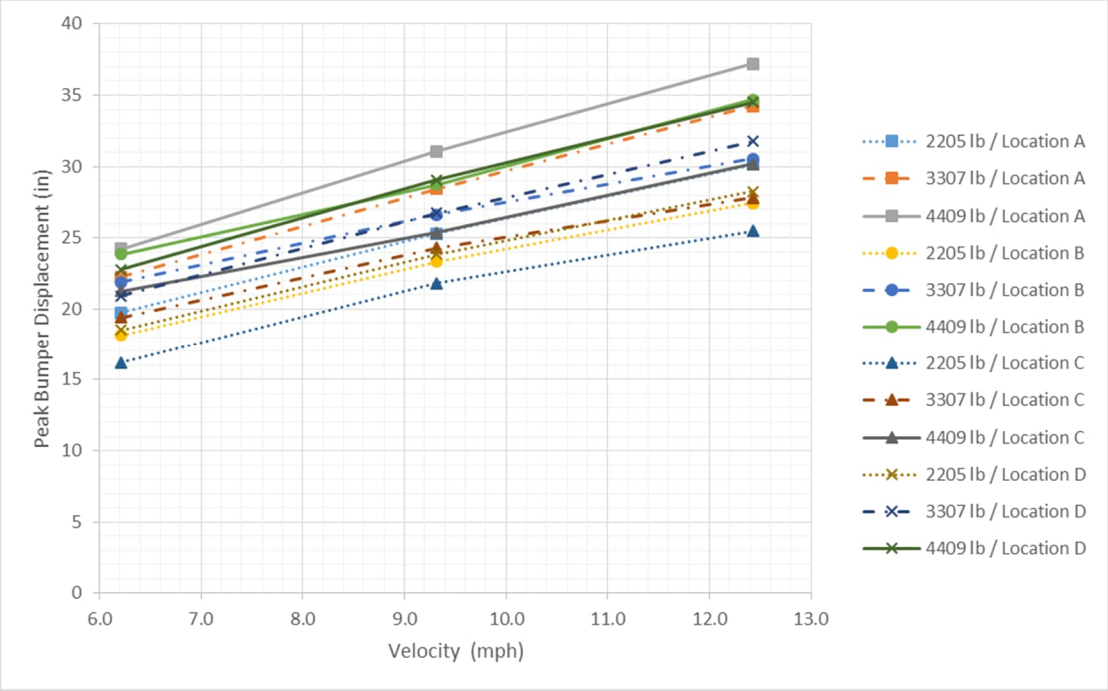

Figure 16: Peak Bumper Displacement vs. Velocity – Three Vehicle masses and 4 impact locations.

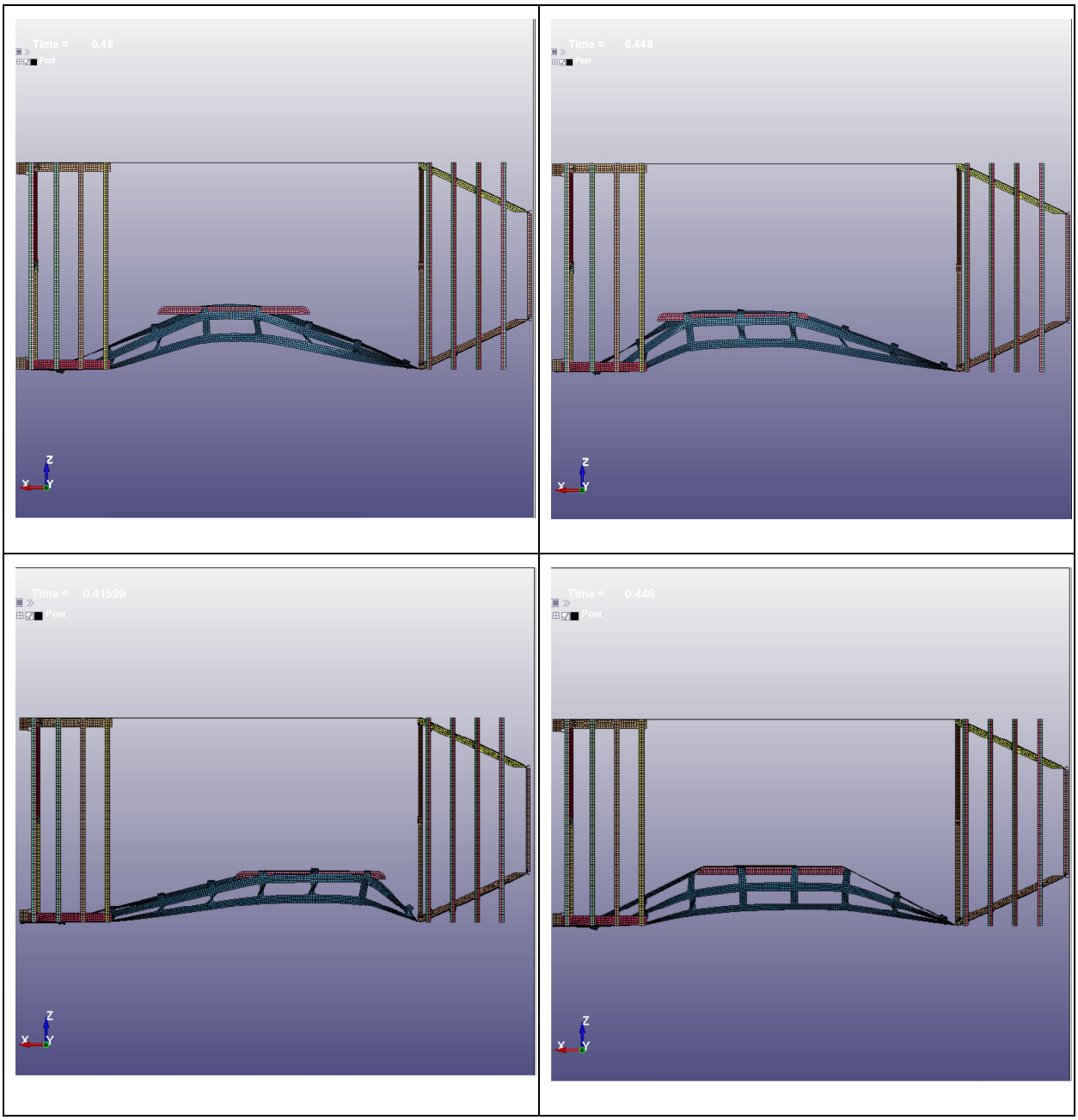

Figure 17: Examples of deflected SUPD under various loading scenarios.

5 Preliminary Observations and Next Steps

Preliminary results from the validated numerical models demonstrate that the PHSS Fortier SUPD has the potential to improve the safety risks associated with passenger car – trailer collisions at relative speeds up to approximately 12 mph.

PHSS Fortier is currently implementing design modifications that will be validated in testing and modeling environments to assess the underride prevention performance of the device at various additional vehicle collision speeds, angles and vertical and longitudinal locations on the SUPD. It is expected that this work will be undertaken between November, 2022 and March, 2023.