SCANNED

01-11-ANPRM-N07-024

PROPOSED RULEMAKING
Docket 1-11 Notice 7

Rear End Underride Protection

On April 27, 1979, a presentation was made by members of the Truck Trailer Manufacturers Association to the Department of Transportation, regarding the proposed rule Docket 1-11 Notice 7, Rear End Underride Protection.

This paper covers that portion of the presentation made by John Storz and Dudley DeWitt of Great Dane Trailers, Inc.

RECEIVED
'79 JUN 28 PM 1:04
DOCKET
WASHINGTON, D.C.

Date: June, 1979

[redacted]

SUMMARY

We, as a trailer manufacturer, recognize the need for a standard resulting in a uniform rear underride for the entire industry, and it is with this intent that an oral presentation was made to the Department of Transportation, documented by this paper.

The estimated cost to the nation due to the proposed rear underride will result in revenue losses and increased fuel costs, totalling 37.4 billion dollars per year.

We have estimated that the proposed rear underride will increase the trailer weight by 1400 to 1700 pounds, which will ultimately cost the users an estimated 130 million dollars per year.

It appears conclusive that the proposed rear underride will restrict the rearmost position of the trailer suspension by at least two (2) feet forward of the present rearmost position.

The combination of increased weight and suspension restrictions of the proposed rear underride will result in lower allowable payloads, therefore, revenue losses. To offset the decrease in allowable payload will require an estimated 22 million additional trailer loads per year to transport the same amount of cargo. These additional loads will create revenue losses estimated at $24,497 per year per trailer. This equates to an annual revenue loss to the nation of 35.5 billion dollars.

The additional trailer loads will increase annual fuel consumption by 2.3 billion gallons or 54.5 million barrels of diesel fuel and a fuel cost increase of 1.86 billion dollars.

Implementation of the proposed rear underride will require major plant modifications. A conservative estimate at this writing to modify Great Dane's three (3) manufacturing plants is in the range of 1.3 million dollars, which does not include production losses as a result of downtime. In addition to this figure, there will be a large investment in engineering manhours, test equipment and compliance testing. Considering the vast number of trailer manufacturers in the United States who will also have similar expenditures, the proposed rear underride will result in extremely high costs to the trailer industry and the consumer.

It was for these reasons that a letter was sent to the Secretary of the Department of Transportation, Mr. Brock Adams, February 12, 1979, which forms the Foreword of this paper.

Summary (cont'd)

It is our sincere hope that this paper and the information provided herein, will influence the Department of Transportation to re-evaluate the cost-safety effectiveness, performance requirements, and operational problems that must be faced by all concerned. It is imperative that all exemptions be clearly defined and the rulemaking time schedule be as reasonable as possible for compliance.

FOREWORD

. We have been informed that the National Highway Traffic Safety Administration has moved the time schedule forward on NHTSA Docket 1-11, Rear End Underride Protection.

We feel that because of this and other reasons mentioned below, the trailer industry is headed for another DOT, FMVSS 121 fiasco. The FMVSS 121 braking law enacted January 1975 has cost the trailer industry, our customers and the public *billions of dollars*. Four years after it was put into effect, the U. S. Court of Appeals for the 9th Circuit Court in San Francisco declared the brake system ineffective and unsafe and, therefore, suspended portions of the law which our customers paid for at no benefit to themselves and the public; and has opened product liability cases where it is impossible for us or our customers to have any chance in getting a fair trial.

The rulemaking schedule for Docket 1-11 was recently, (1) Notice of Proposed Rulemaking 1980, (2) Final Rule 1981, (3) Effective 1982 - 1983.

The new dates are (1) Notice of Proposed Rulemaking Sept. 1979, (2) Final Rule Sept. 1980, (3) Effective Sept. 1981.

The method that NHTSA is using to develop the proposed ruling is inadequate in many areas, a few of which are listed below.

The statistics used are inadequate and, therefore, good reliable cost-safety effectiveness has not been developed. NHTSA assumed rear underride does occur and is concerned about penetration of the trailer rear into the passenger compartment. Their efforts should be directed first toward preventing a rear underride accident from occurring and, therefore, should put their effort into such areas as improved visibility of the rear of the trailer. Most of the tests conducted for NHTSA are by the use of new expensive automobiles hitting the rear of stationary trailers at 40 mph. Their concern is no penetration and all tests indicate that even with no penetration the occupants still could not survive such a crash. The test methods are questionable - in some tests the trailer is against a solid wall at the front, thereby producing extremely high, unrealistic forces during impact - from 100,000 lbs to 190,000 lbs.

With the timetable change, NHTSA technical people will not have sufficient time to develop a good safety law and their efforts should be in preventing the accident in the first place rather than in minimizing penetration. The industry cannot design and test for compliance in one year.

I. INTRODUCTION

The purpose of this paper is to bring to the attention of the Department of Transportation, the National Highway Traffic Safety Administration (NHTSA) and the Bureau of Motor Carrier Standards (BMCS), information that will be beneficial in developing a good, safe rear underride requirement.

Since performance requirements have not been established at this time, certain assumptions have been made. These assumptions are based on meetings with the Truck Trailer Manufacturers Association (TTMA), National Highway Traffic Safety Administration (NHTSA), Bureau of Motor Carrier Standards (BMCS), Texas Transportation Institute (TTI) and Dynamic Science, Inc.

The basic assumptions are, (1) that a rear underride guard on a trailer must be capable of stopping a variety of different size automobiles, traveling at a velocity of 40 miles per hour, without penetration into the passenger compartment, and (2) forces in the magnitude of 150,000 to 200,000 pounds with a centerline crash, and (3) forces in the magnitude of 75,000 to 100,000 pounds with an off-center crash, and (4) a rear underride height of approximately 20" from the ground when the trailer is empty.

Many comments of concern have been expressed by interested parties regarding the proposed rear underride. These comments covered items such as structural, operational, economic factors related to payload reductions due to increased weights, and revenue reductions due to axle location restrictions. These comments should be considered by the National Highway Traffic Safety Administration (NHTSA) and the Bureau of Motor Carrier Standards (BMCS).

In this report we have taken some of these general comments and attempted to be very specific, to illustrate the impact this proposed regulation would have on our industry, our customers, and the country. We have, in this paper, dealt with facts and not just general comments.

We will review past history, past failures, recent DOT tests and the failures observed. The structural changes required to satisfy this proposed regulation will be reviewed and the effect of weight and cost increases. Modifications to manufacturing facilities will be reviewed. Reductions in payload caused by this proposed regulation and its effect of revenue losses to the operators will also be reviewed.

Based on the tremendous impact of this requirement and based on the assumptions made, the following questions should be answered:

Introduction (continued)

1. What will the weight of a rear underride be to comply with this proposed regulation?

2. Are major modifications to the trailer frame structure required?

3. What will be the increase in cost for the new rear underride?

4. What impact will this proposed regulation have on the trailer manufacturing industry?

5. What will the cost be to modify our manufacturing plants?

6. What is a realistic time frame to design, evaluate and comply with this proposed regulation?

7. What revenue losses will the operators have due to an axle location restriction and weight increases?

8. What will be the revenue losses to the American trucking industry?

All of these questions and many others will be answered in this paper. It is very important that these questions be understood and evaluated prior to a proposed rulemaking.

II. DESIGN AND TESTING

2.1 Tests Conducted by Great Dane Trailers, Inc.

The test method used from 1967 to the present for upgrading the I. C. C. bumper is shown schematically in Figure 1.

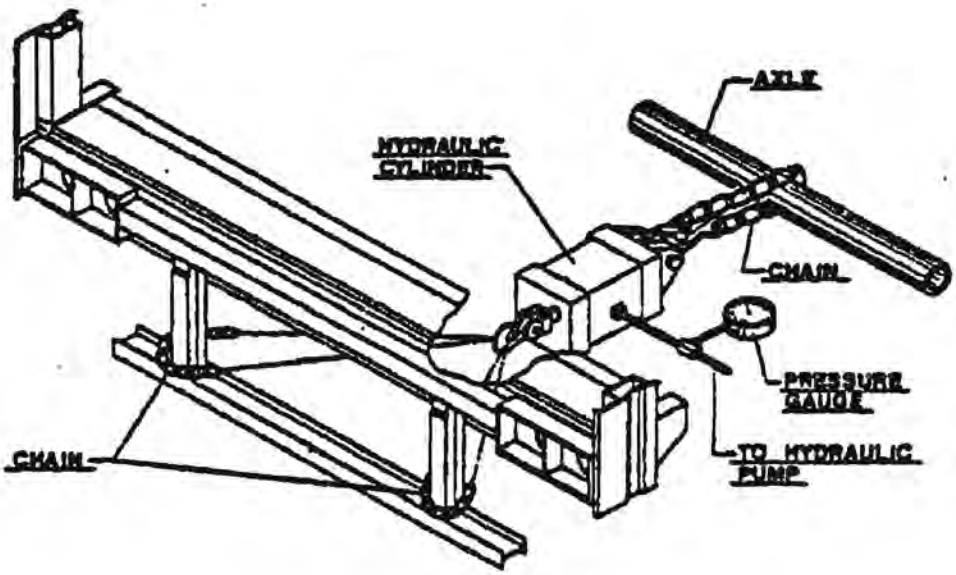

Figure 1

The force was applied to the vertical members of the I. C. C. bumper through chains connected to a hydraulic cylinder which was anchored to the rear axle to take the reaction force. The applied force was measured by pressure and by a dynamometer (see Figures 1, 2, 3 and 4).

e. Rear frame

f. Underride

The greater the increase in rated load over 50,000 lbs., the greater the restriction on the rearmost position of the slide type running gear, also the heavier the trailer. The effects of this increase on our customers will be:

a. Loss of payload due to running gear restrictions.

b. Loss of payload due to increased weight.

c. Increased trailer cost.

2.3 Tests conducted by the Texas Transportation Institute (TTI):

TTI is currently conducting crash tests for DOT. The design of the rear underride, as shown in Figure 20, prevents the sliding tandem from being positioned at least two feet from the rear. This type of design utilizes a very efficient angle for the diagonal struts, but penalizes the amount of payload that can be carried.

The rear underride shown in Figure 20 is after a crash test directed at the centerline of the trailer using a 2250 lb. Volkswagen Rabbit at a controlled speed of 40 mph. The peak force generated upon impact was approximately 100,000 lbs. Figure 21 shows that this test trailer had a 6 inch I-beam for an upper running gear rail, which sustained local buckling from the crash force.

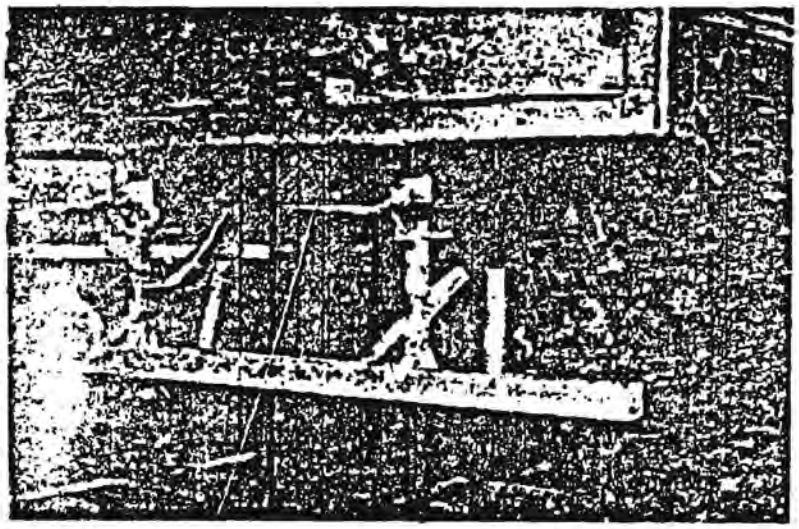

Figure 20

Another test conducted by TTI was an off center impact, by crashing a 4500 lb. Ford LTD at 40 mph into the same guard as shown in Figure 20. Figures 23 & 24 show extensive damage to the underride and Figure 25 shows extensive damage to the 6 inch L-beam upper running gear rail. This test confirms the need for additional vertical members attached to the trailer frame and to the outermost ends of the horizontal member in order for an underride to withstand an off center impact load of this magnitude.

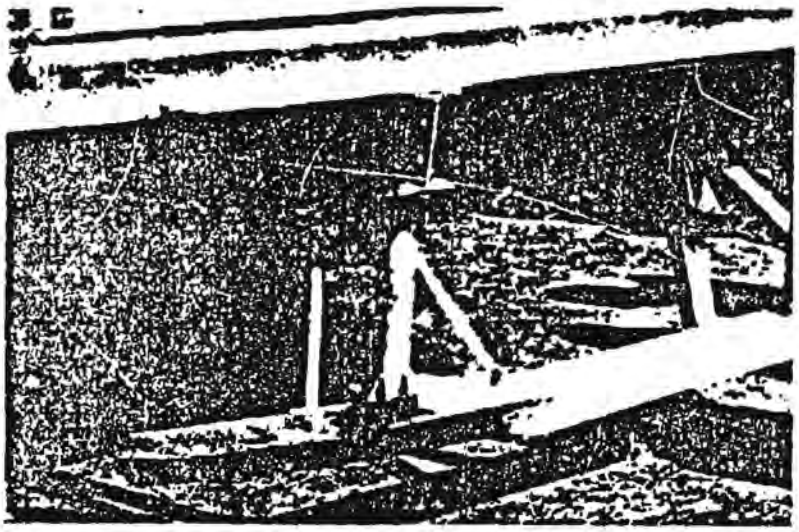

Figure 23

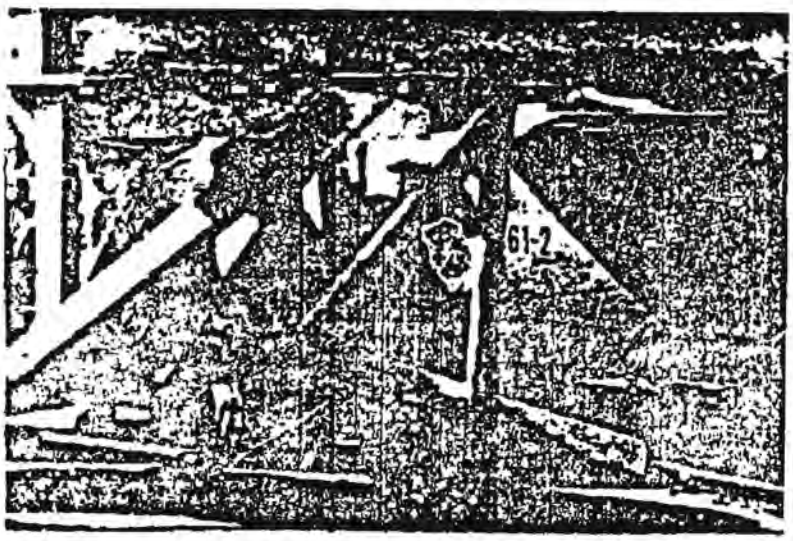

Figure 24

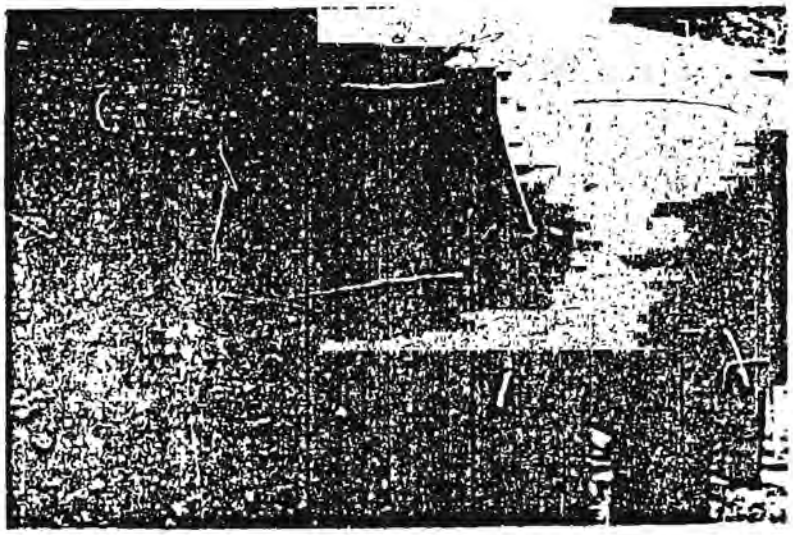

Figure 25

2.4 Conclusion of Tests:

Our tests and the T. T. I. tests indicate that by using a rigid barrier rear underride concept, the following changes would be required:

a. Upper running gear rails would have to be at least 10 inches deep.

b. Rear corner posts would have to be extended and attached to the horizontal member to provide 4 vertical members to withstand off center loads.

c. Bottom side rail reinforcing at the rear.

d. Sidewall reinforcing at the rear.

e. Restriction of the rearmost running gear location.

Therefore, if we attempted to design a rear underride device based on a rigid barrier concept, taking the above changes into account and assuming a rating of 150,000 lbs., this underride could possibly weigh over 1700 lbs. We arrived at this potential weight figure by projecting the 45,000 lb. to 50,000 lb. curve to the 150,000 lb. rating grid, see Figure 26. It may be possible to decrease the slope of this projected curve for the rigid barrier concept through innovative design, however, this would be quite limited. In any case, a rigid barrier concept for loads greater than 50,000 lbs. will require major changes throughout the trailer.

2.5 Time Schedule:

After the proposed rulemaking Docket 1-11 Notice 5 was issued March 1969, we initiated design and testing work as previously discussed. The plan and actual time recorded is as shown on the Chart, Figure 27. It took us eight (8) months to design and test the two (2) vertical strut type and four (4) vertical strut type underride designs, which did comply with the Docket 1-11 Notice 5 with failures to the trailer frame.

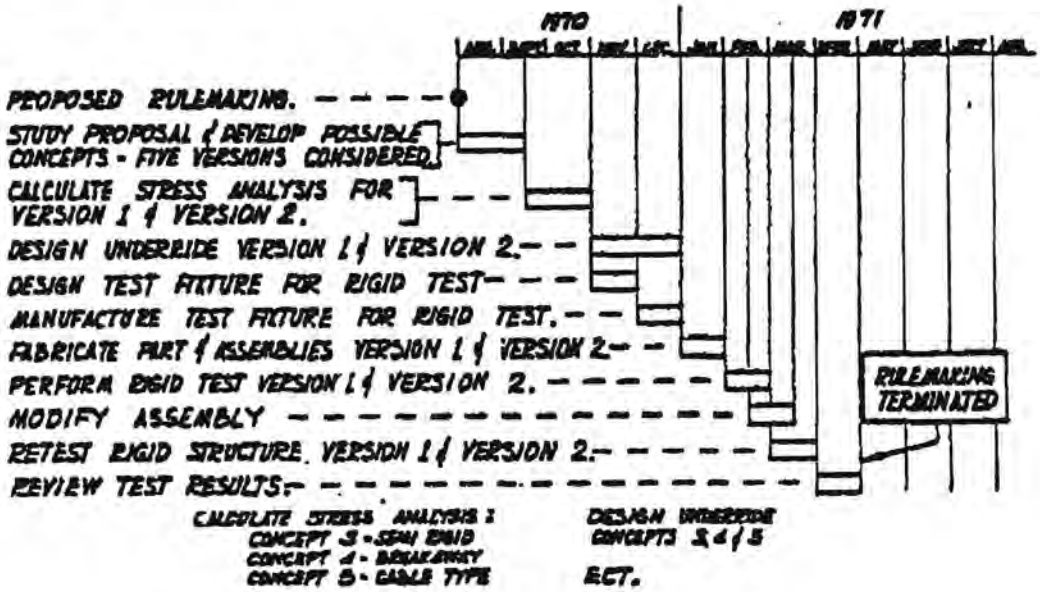

Figure 27

The next phase would have been to evaluate other methods and concepts, such as non-rigid underride barriers as shown in Figure 28 in an effort to eliminate trailer frame failure and to reduce the weight and cost of the underride. When the rulemaking terminated in April of 1971 (Docket 1-11 Notice 6), our development work ceased other than to upgrade our bumper as previously shown.

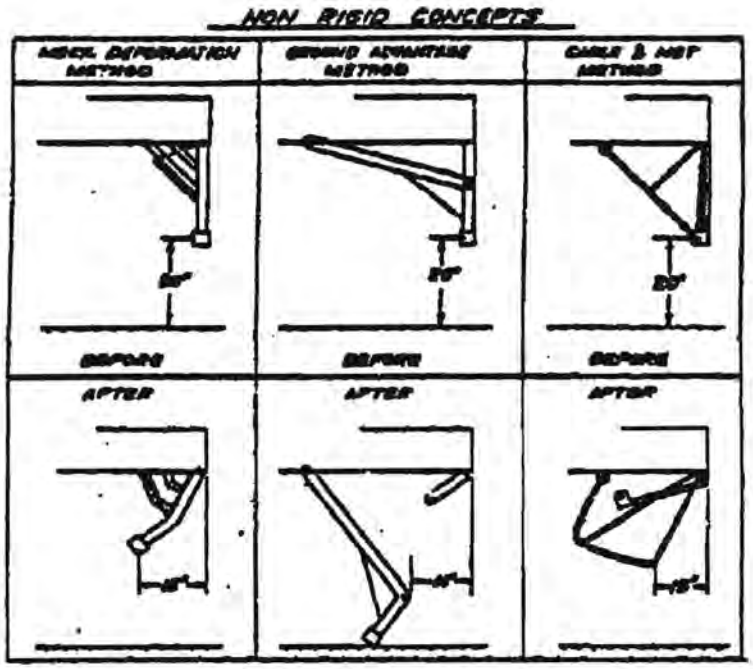

Figure 28

2.6 Questions:

Our past experience raises the following questions concerning a new proposal Docket 1-11 Notice 7:

1. If it took us eight (8) months to design and test for a 50,000 lb. rear underride without completion, then what will be required to develop a 100,000 to 150,000 lb. rear underride?

2. If the performance requirements are dynamic, then what test methods are needed to comply?

3. What effect will this underride have on the trailer frame and how will this affect manufacturing?

4. What effect will the new rear underride have on the user, such as "loss in payload" due to restriction of movement of the running gear and "increased weight?"

These questions cannot be answered until after the performance requirements are finally established for Docket 1-11 Notice 7.

What questions should be answered before the performance requirements are finally established for Docket 1-11 Notice 7?

1. Are 100,000 to 150,000 lb. forces realistic?

2. Is it reasonable to expect to stop a 40 mph vehicle from underriding a trailer, when the impact forces are so great that the passenger cannot survive the crash?

3. Is it cost effective?

4. Is there sufficient time to implement this new rule?

III. MANUFACTURING

We have reviewed the design aspects of rear underrides based on the assumption of a rigid barrier concept to withstand forces in the magnitude of 150,000 lbs.

The changes required as previously reviewed were:

a. Upper running gear rails to be structurally equivalent to a 10" I-beam.

b. Extend the rear corner posts to the horizontal member to withstand off center loads.

c. Steel shear panels at the rear side walls.

d. Strengthen the bottom side rails.

e. Redesign the running gears, fixed and slider type.

What effect will these changes have on manufacturing?

3.1 Rear Frame:

A major rear frame redesign will be required to extend the rear corner posts which will affect the corner castings, rear sill and corner posts. The rear frame jigs, which are numerous in each plant (see Figure 29) will require major changes.

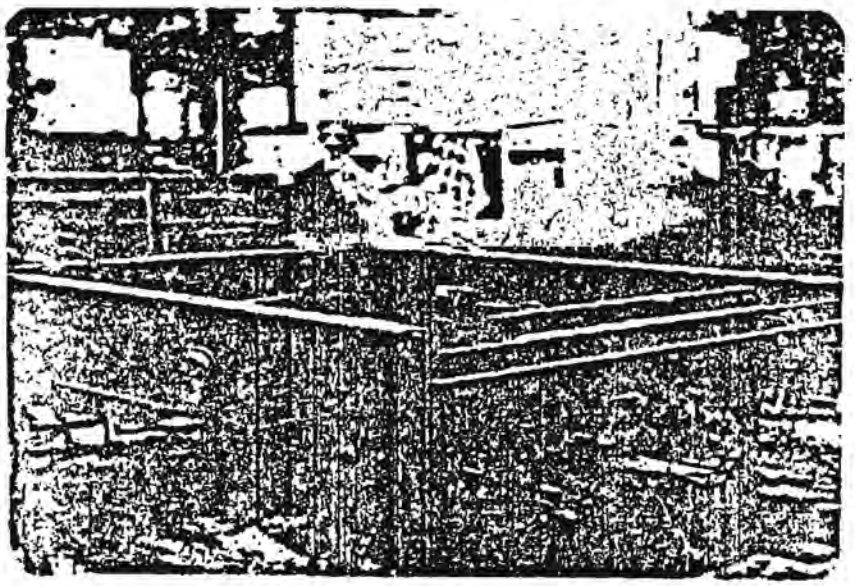

Figure 29

Assuming the tandem will be at least two feet forward from its present rear position, this results in a loss in revenue of $117.64 per trip. If the average trips per year is 148, results will be a loss in revenue of $17,410.72 per year for every trailer in the customers operation.

Assuming the rear underride will increase the trailer weight by approximately 1400 pounds, the payload reduces by 1400 pounds at $3.42 per 100 pounds. This would reduce the revenue per trip an additional $47.88. Taking into account the tandem location and the underride weight reduces revenue by $165.52 per trip per vehicle. This results in a loss in revenue of $24,497 per year for every trailer in the customers operation, assuming 148 trips per year.

4.5 Annual Cost to the Trucking Industry:

Assumptions:

A. The averages shown by the ten customers is typical nationwide.

1. Freight Rate = $3.42/CWT

2. Trailer makes 148 trips per year

3. Average miles per trip = 518

B. Total commercial trailer population (from 1977 Trailer and Semi-Trailer Registration) = 2.9 million.

C. 50% of the trailer population will be required to have the proposed underride guard by regulations. 50% will be exempt because of axle location, trailer types, etc.

D. The proposed underride will require the trailer tandem be moved forward two feet. The payload loss due to the tandem location = 3440#.

E. The proposed underride will add 1400 pounds more than the present guard to the trailer weight.

F. Fuel consumption for a tractor trailer combination results in five miles per gallon of diesel fuel.

G. Middle distillate of petroleum yields 42 gallons diesel fuel per barrel.

H. Cost of diesel fuel (May 23, 1979) is $.81 per gallon.

J. Revenue loss per year due to tandem location for 148 trips = $17,410.72 per trailer.

K. Revenue loss per year due to weight of underride for 148 trips = $7,086.24 per trailer.

L. Revenue loss per year due to underride weight and tandem location = $24,496.96 per trailer.

Calculations:

1. Trucking Industry Revenue Loss per Year:

$$\text{Revenue Loss/Year} = (L)(B)(C)$$

$$= (\$24,497)(2,900,000)(.5)$$

$$= \$35,520,650,000$$

2. Trucking Industry Fuel Loss per Year:

Assuming that the loss in payload due to tandem location and rear underride weight must still be transported, the additional equipment needed and the fuel needed can be calculated.

$$\text{Cargo to be transported} = (D+E)(A_1)(B)(C)$$

$$= (3440 + 1400)(148)(2,900,000)(.5)$$

$$= 1,038,664,000,000 \text{ pounds}$$

Assuming an allowable payload of 46,974#, it would require 22,111,466 trailer loads to transport this cargo.

$$\text{Fuel required in gallons} = \frac{(\text{Number of Loads})(A_3)}{F}$$

$$\frac{(22,111,466)(518)}{5} = 2,290,747,878 \text{ Gallons}$$

$$\text{Barrels of Oil} = \frac{\text{Gallons Required}}{G}$$

$$= \frac{2,290,747,878}{42}$$

$$= 54,541,616 \text{ Barrels}$$

Cost of Fuel Required = (Gallons Required) (H)

= (2, 290, 747, 878) (. 81)

= $1, 855, 505, 781

Summary:

Therefore, a rear underride such as being proposed could cost the nation $37, 376, 155, 781 in revenue loss and additional fuel. With losses of this magnitude it surely leads to this question: "IS THE PROPOSED REAR UNDERRIDE REALLY COST EFFECTIVE?"

V. CONCLUSION

In the Introduction section of this paper, we indicated that we would illustrate the impact of the proposed rear underride regulation, on our industry, our customers and the country. We also indicated that certain questions should and would be answered.

The questions were as follows:

Question 1 - What will the weight of a rear underride be to comply with this proposed regulation?

Answer - If it is a rigid barrier type, 1400# to 1700#.

Question 2 - Are major modifications to the trailer frame structure required?

Answer - Yes

Question 3 - What will be the increase in cost for the new rear underride?

Answer - Approximately $1300.

Question 4 - What impact will this proposed regulation have on the trailer manufacturing industry?

Answer - A major impact involving plant modification, engineering designs and testing and production losses.

Question 5 - What will the cost be to modify our manufacturing plants?

Answer -

	Total (3) Plants
Upper running gear dies - - -	$ 60,000
Jigs & Fixtures - - - - - - - -	205,000
Transfer dollies - - - - - - -	35,000
Main Assembly - - - - - - - -	995,000

or an estimated cost of $1,295,000, not including the loss in production during the change-over period which could be considerable.

Question 6 - What is a realistic time frame to design, evaluate and comply with this proposed regulation?

Answer - More than two years after a final rulemaking, which does not include tooling and implementation into production.

Question 7 - What revenue losses will the operators have due to an axle location restriction and weight increases?

Answer - An estimated loss of $24,497 per year per trailer.

Question 8 - What will be the revenue losses to the American trucking industry?

Answer - An estimated loss of $35.5 billion, not including cost due to increase in fuel consumption.

With the information supplied in this report, we have answered many questions. There is, however, one remaining question, "IS THE PROPOSED REAR UNDERRIDE REALLY COST EFFECTIVE?"

TRACTOR MAKE		ESTIMATED WEIGHT SUMMARY	
MODEL W.B. 160"		TRACTOR	15,650
TIRES		SEMI-TRAILER	12,165
FIFTH WHEEL		SPARE	
FUEL TANK & FUEL		PAYLOAD	
DRIVER		Water Level Load	50,419
TOTAL TRACTOR WEIGHT	15,650	TOTAL GROSS WEIGHT	78,234

NOTES:

TRACTOR WEIGHT ESTIMATED ON BEST INFORMATION AVAILABLE. WEIGHTS MUST BE ADJUSTED IF ANY VARIATION IN TRACTOR WEIGHT.

DUE TO REASONABLE VARIATION FROM THEORETICAL WEIGHTS OF MATERIALS USED IN THIS UNIT, THE WEIGHTS SHOWN ARE APPROXIMATE AND ARE NOT GUARANTEED.

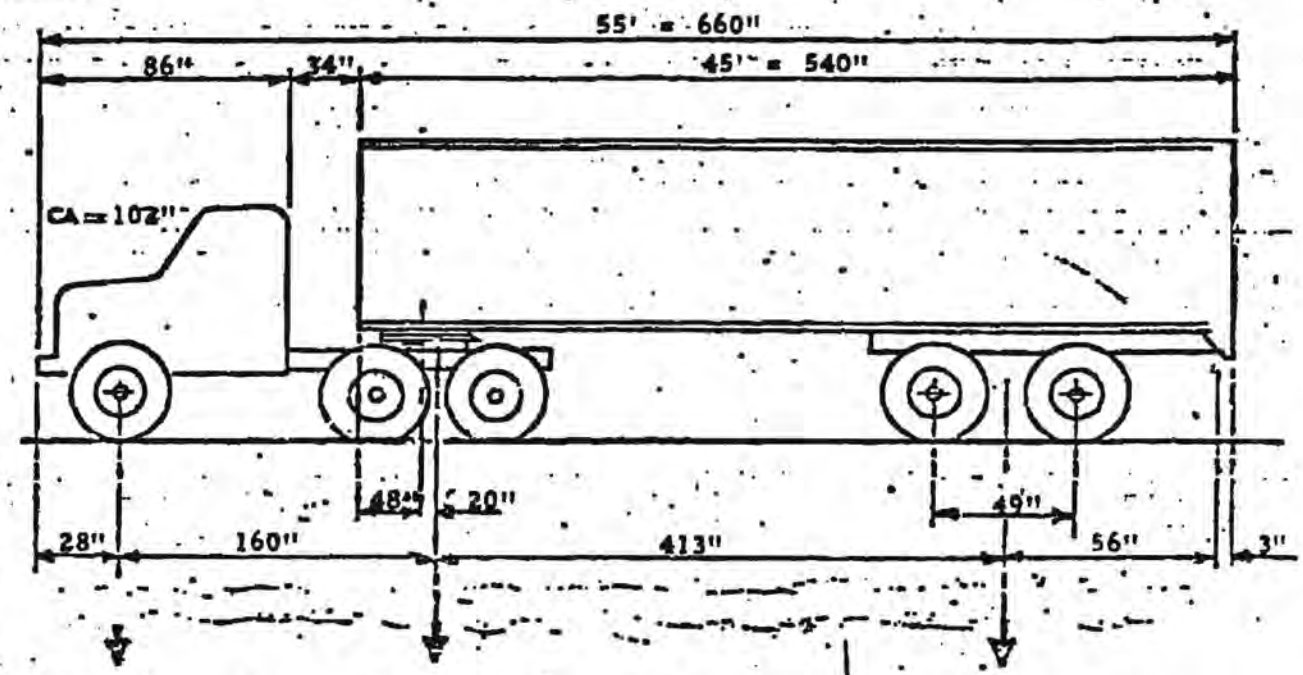

8,535#	7,115#	TRACTOR	
502#	3,513#	TRAILER	8,150#
3,071#	21,498#	PAYLOAD	25,850#
12,108#	32,126#	TOTALS	34,000#

UNIT DESIGNED FOR OPERATION IN:

WITH THE FOLLOWING RESTRICTIONS:

TOLERANCE

GROSS WEIGHT

OVER ALL LENGTH

DRIVE AXLE WEIGHT 34,000#

TRAILER AXLE WEIGHT 34,000#

FORMULA Federal Law

SERIAL				S.O.
DRAWN	DATE	NO. REQ'D.	CH.	DATE

CUSTOMER:

DISTRIBUTOR:

DO NOT SCALE DWG.

GREAT DANE Trailers INC.

SAVANNAH, GA.

Dwg. No.